ASHTREE
VISION & SAFETY

Established 1977

MIRRORS

MIRROR ARMS

WARNING BEACONS

CCTV

WORK LIGHTS

REVERSE ALARMS

Designers and manufacturers of mirrors and mirror arms - Suppliers of Warning and Safety Products

Introduction

ASHTREE
VISION & SAFETY

Welcome to the latest catalogue from Ashtree Vision & safety. As you may already know, Ashtree is a family owned business specialising in the design and manufacture of mirrors and mirror arms since being founded in 1977. Using contacts made in the last 42 years, Ashtree has now added a range of warning and safety products. These can be found on pages 49-53 of this publication.

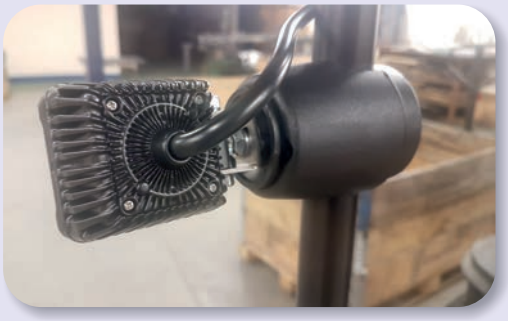

Being innovators by nature we haven't simply gone out and sourced products that are "Me Too" parts. We have sourced parts that offer something new, like the TMA, The Mighty Atom, parts, which can be seen on the right hand side of this page. Also different is our AVS-WLMB series of products that marry up a quality work light with a bracket that allows the assembly to be fastened onto any bar between 16 & 28mm in diameter, please see the image to the left.

This isn't the end of the new products that Ashtree will be adding, there will be plenty more in the coming months, if you want to be kept up to date with all that we add please join our mailing list at www.avsuk.co

Ashtree staff after being presented with the Queens Award for Enterprise.
Two Ashtree directors later met the Queen at a Buckingham Palace reception for award winners.

Contents

For the part number index and the register of Ashtree "E" numbers, please turn over.

	These are the main mirrors used by drivers of trucks, buses, construction equipment and most other vehicles.	PAGES 4 - 11
	Class IV - Drivers wide angle mirrors Class V - Overdoor or kerb mirrors Class VI - Front view or over screen mirrors	PAGES 12 - 15
	Ideal for machines where the driver is unable to adjust a mirror by hand.	PAGES 16 - 19
	Many of the Ashtree mirrors are tough, very tough. See how tough on Pages 20-23.	PAGES 20 - 23
	Interior visibility solutions for many different types of vehicle.	PAGES 24 - 27
	Widely used on construction equipment, agricultural and materials handling equipment.	PAGES 28 - 31
	Replacement glasses for Ashtree mirrors and also those of other manufacturers.	PAGES 32 - 35
	Universal heating elements.	PAGE 35
	The ever increasing range of Ashtree mirror arms in diameters from 16-28mm.	PAGES 36 - 47
	MOT Plate holders, height indicators and licence holders.	PAGE 48
	WASP - Warning and Safety Products	PAGES 49 - 53

Mirror 'e' Number Index

Current EU regulations require that newly homologated vehicles are now fitted with mirrors which have been tested to the latest EU directives: 2003/97/EC & 2005/27/EC. For this reason most of our older mirrors are being re-tested and have the 03* prefix, instead of the old 02* prefix. Both numbers are shown in this list.

"e" Number	Ashtree Part No.	Page No.
e11 III 02*1008	M400CE	5
e11 II 02*3701	M600CE	8
e11 II 02*3701	M600FE	8
e11 III 02*3702	M5000FE	7
e11 III 02*3702	M500FE	6
e11 II 02*3703	M5000CE	7
e11 II 02*3703	M500CE	6
e11 III 02*3704	M2000CE	4
e11 III 02*3704	M2000FE	4
e11 III 02*3704	M200CE	4
e11 III 02*3704	M200FE	4
e11 II 02*3709	M800CE	11
e11 II 02*3710	M701CE	10
e11 II 02*3711	M602CE	8
e11 III 02*3712	M410CE	6
e11 II 02*3713	M4101CE	6
e11 II 02*3716	M702CE	10
e11 I 02*3719	M310CEA1	25
e11 I 02*3719	M310FEA1	25
e11 IV 02*3720	M3102CE	13
e11 V 02*3720	M3102CEA1	25
e11 II 02*3721	M3101CE	5
e11 III 02*3722	M310CE	5
e11 III 02*3722	M310FE	5
e11 II 02*5464	M520CE	7
e11 IV 02*5465	M504CE	14
e11 V 02*5465	M504CEA	14
e11 III 02*5473	M5201CE	7
e11 II 02*5508	M807CE	11
e11 II 02*5510	M613CE	9
e11 II 02*5511	M714CE	10
e11 II 02*5511	M714FE	10
e11 III 02*5572	M7141CE	10
e11 II 02*5803	M610CE	8
e11 III 02*5804	M6101CE	8
e4 II 02*5914	MO225CE	5
e11 II 03*5957	M820CE	11
e11 II 03*6125	M626CE	9
e11 II 03*6125	M6261CE	9
e11 II 03*6126	M528CE	7
e11 III 03*6203	M9151CEH	17
e11 II 03*6203	M915CEH	17
e11 II 03*6203	M916CEH	17
e11 II 03*6287	M545CE	7
e11 II IV 03*6288	M9201CEH	17
e11 II IV 03*6288	M920CEH	17
e11 IV V 03*6320	M2381CE	13
e11 VI 03*6320	M2382CE	13
e11 IV V 03*6320	M238CE	13
e11 IV V 03*6343	MX6351CE	15, 22
e11 VI 03*6343	MX635CE	15, 22
e11 IV V 03*6404	M430CE	13
e11 IV V 03*6404	M430CEA1	13
e11 IV V 03*6404	MX430CE	20
e11 IV V 03*6404	MX430CEBR	49
e11 IV V 03*6404	MX430CER	49
e11 VI 03*6447	MX550CE	15, 22
e11 VI 03*6447	MX550CEA	15
e11 VI 03*6447	MX550CEA3	15
e11 IV V 03*6588	M435CE	14, 25
e11 II III 03*6589	M725CEB	10
e11 II III 03*6589	MX725CEB	23
e11 II III 03*6590	M555CE	8
e11 II III 03*6590	MX555CE	22
e11 II III 03*6619	M440CE	6
e11 II III 03*6619	MX440CE	21
e11 II III 03*6619	MX440CEBR	49
e11 II III 03*6619	MX440CER	49
e11 III 03*6622	M5000FE	7
e11 III 03*6622	M500FE	6
e11 II 03*6623	M5000CE	7
e11 II 03*6623	M500CE	6
e11 III 03*6624	M2000CE	4
e11 III 03*6624	M2000FE	4
e11 III 03*6624	M200CE	4
e11 III 03*6624	M200FE	4
e11 III 03*6624	M2000CEA2	25
e11 III 03*6624	M2000FEA2	25
e11 II 03*6625	M701CE	10
e11 II 03*6626	M602CE	8
e11 III 03*6627	M410CE	6
e11 II 03*6628	M4101CE	6
e11 II 03*6630	M702CE	10
e11 I 03*6632	M310CEA1	25
e11 I 03*6632	M310FEA1	25
e11 IV 03*6633	M3102CE	13
e11 V 03*6633	M3102CEA1	25
e11 II 03*6634	M3101CE	5
e11 III 03*6635	M310CE	5
e11 III 03*6635	M310FE	5
e11 II 03*6636	M520CE	7
e11 III 03*6637	M5201CE	7
e11 II 03*6638	M613CE	9
e11 II 03*6639	M714CE	10
e11 II 03*6639	M714FE	10
e11 III 03*6640	M7141CE	10
e11 II IV 03*6641	M922CEH	17
e11 II IV 03*6641	M923CEH	18
e11 II IV 03*6642	M9231CEH	18
e11 II 03*6643	M610CE	8
e11 III 03*6644	M6101CE	8
e11 II 03*6645	M912CEH	17
e11 II 03*6737	M800CE	11
e11 II 03*6741	M807CE	11
e11 IV & V 03*6843	M250CE	13
e11 IV & V 03*6843	MX250CE	20
e11 II & III 03*6921	M8231CE	11
e11 IV & V 03*8012	M4402CE	14
e11 IV & V 03*8012	MX4402CE	21
e11 IV & V 03*8012	MX4402CEBR	49
e11 IV & V 03*8012	MX4402CER	49
e11 II, III & IV 048173	M925CEH	18
e11 II, III & IV 048173	M926CE	18
e11 II, III & IV 048173	MX925CEH	23
e11 II, III & IV 048173	MX926CE	23
e11 VI 46R 048505	M5601CE	15, 29
IV 46R 048748	M455CE	14
IV 46R 048748	MX455CE	21
II 46R 048749	M450CE	6
II 46R 048749	MX450CE	21
II 46R 048750	M640CEB	9
II 46R 048750	MX640CEB	22
e3 02*56323	MO613CE	9
	M927CEH	18

Part Number Index

Ashtree Part No.	Page No.	Ashtree Part No.	Page No.	Ashtree Part	Page No.	Ashtree Part No.	Page No.
AVS-ABM202	49	M4101CE	6	MX4402CEB	21	S1374	41
AVS-ACC108	53	M410CE	6	MX440CE	21	S1375	41
AVS-ACC109	53	M430CE	13	MX440CEB	21	S1376	41
AVS-ACC110	53	M430CEA1	13	MX450CE	21	S1377	41
AVS-ACC111	53	M430CEB	13	MX450CEB	21	S1378	41
AVS-ALARM100	51	M435CE	14, 25	MX455CE	21	S1381	41
AVS-ALARM200	51	M435CEA2	26	MX455CEB	21	S1382	41
AVS-ALARM300	51	M435CE-Stud	14, 25	MX550CE	15, 22	S1384	41
AVS-ALARM400	51	M4402CE	14	MX550CEA	15	S1385	42
AVS-ALARM500	51	M4402CEB	14	MX550CEA3	15	S1387	42
AVS-ALARM600	51	M440CE	6	MX550CEB	15, 22	S1397	42
AVS-BAL1	52	M440CEB	6	MX555CE	22	S1400	43
AVS-BALCAM	53	M450CE	6	MX555CEB	22	S1403	43
AVS-BEA200	49	M450CEB	6	MX6351CE	15, 22	S1406	43
AVS-BEA201	49	M455CE	14	MX635CE	15, 22	S1500-64/44	44
AVS-BEA202	49	M455CEB	14	MX640CEB	22	S1500-78/63	44
AVS-BEA203	49	M5000CE	7	MX725CEB	23	S1550-16/55	44
AVS-CCTV300	53	M5000FE	7	MX925CEH	23	S1550-28/52	44
AVS-CCTVEXT10M	53	M500CE	6	MX926CE	23	S1550-33/52	44
AVS-CCTVEXT20M	53	M500FE	6	MX941	29	S1550-61/45	45
AVS-DIN102	50	M504CE	14	MX941A	29	S1550-66/37	45
AVS-DIN103	50	M504CEA	14	MX941B	29	S1550-73/69	45
AVS-DIN104	50	M5201CE	7	MX942	30	S1550-76/45	45
AVS-DIN105	50	M520CE	7	MX942A	30	S1550-79/52	45
AVS-DIN106	50	M528CE	7	MX942B	30	S1550-83/64	45
AVS-DIN107	50	M545CE	7	MX943	23, 26, 30	S1550-85/70	45
AVS-DIN108	50	M545CEB	7	MX943A2	26	S1550-86/52	45
AVS-MLB100	52	M555CE	8	MX948	23, 31	S1551-16/50	45
AVS-MLB200	52	M555CEB	8	MX948B	23, 31	S1601	46
AVS-MLB500	52	M5601CE	15, 29	MX950-Stud	31	S1602	46
AVS-MLB600	52	M5601CEA	15, 29	MX950-Tunnel	31	S1603	46
AVS-SBLT100	49	M560C-42	29	MX951-Stud	31	S1604	46
AVS-SBLT105	49	M560C	27	MX951-Tunnel	31	S1605	46
AVS-SCENE1	51	M600CE	8	MX952	31	S1630	47
AVS-SIDCAM	53	M600CESW	8	PLH50	48	S1650	47
AVS-STDCAM	53	M600FE	8	PLH52	48	S1700-64/44	47
AVS-TMA100	50	M602CE	8	PLH60	48	S1750-16/55	47
AVS-TMA200	50	M6101CE	8	PLH74D	48	S1750-61/45	47
AVS-TMA300	50	M610CE	8	PLH74S	48	S901	37
AVS-TPD100	50	M613CE	9	PLH74T	48	S901-12	37
AVS-WLCI914	51	M6261CE	9	S1090	13	S902	37
AVS-WLCU990	51	M626CE	9	S1091	15	S903	37
AVS-WLMB1	51	M631	26	S1170	43	S904	37
AVS-WLMB2	51	M631CA	26	S1170X	43	S905	37
AVS-WLRE616	51	M640CEB	9	S1172	43	S2000	47
AVS-WLRE690	51	M701CE	10	S1172X	43	Y2089	37, 38
AVS-WLSQ4	51	M702CE	10	S1173	26, 27	Y2177	19
AVS-WLSQ580	51	M7141CE	10	S1181-Y3135	49	Y2242	46
AVS-WLSQ914	51	M714CE	10	S1186	38	Y2610	35
G200FE - GW927CEH	32 - 35	M714FE	10	S1187	38	Y2611	35
M2000CE	4	M725CEB	10	S1190	38	Y2611-12	35
M2000CEA2	25	M800CE	11	S1191	38	Y2613	35
M2000FE	4	M807CE	11	S1192	38	Y2614	35
M2000FEA2	25	M820CE	11	S1192s	38	Y2615	35
M200CE	4	M8231CE	11	S1193	39	Y2616	35
M200FE	4	M912CEH	17	S1194	38	Y2618	35
M235C	25	M9151CEH	17	S1195	39	Y2618-12	35
M2381CE	13	M915CEH	17	S1196	39	Y2619	35
M238CE	13	M916CEH	17	S1197	39	Y2619-12	35
M245C	27	M9201CEH	17	S1198	39	Y2621	35
M245C-42	29	M920CEH	17	S1198s	39	Y2621-12	35
M250CE	13	M922CEH	17	S1200	39	Y2670-3	40, 46
M250CEB	13	M9231CEH	18	S1201	39	Y2670-4	40, 46
M3101CE	5	M923CEH	18	S1202	43	Y2672	44
M3101CEB	5	M925CEH	18	S1203	43	Y2675	19
M3102CE	13	M926CE	18	S1216	14, 43	Y2676	19
M3102CEA1	25	M927CEH	18	S1217	43	Y2677-12	19
M3102CEB	13	MO225CE	5	S1222	39	Y2677-24	19
M310CE	5	MO613CE	9	S1230	27	Y2678	19
M310CEA1	25	MO613CE=Black	9	S1350	40	Y2680	43
M310CEB	5	MX250CE	20	S1352	40	Y3098	19
M310FE	5	MX250CEB	20	S1360	40	Y3107	19
M310FEA1	25	MX430CE	20	S1361	40	Y3123	47
M310FEB	5	MX430CEB	20	S1370	40	Y3124	47
M400CE	5	MX4402CE	21	S1372	41	Y3134	53

Main Mirrors - Class II & III

Class II & III mirrors are the required main mirrors for road going trucks and buses. They are also widely used on construction equipment, tractors and many other off highway applications.

The Ashtree range of products are used extensively by OEM manufacturers worldwide and also in the after market as replacement parts. They are designed and manufactured by Ashtree and most come with a universal fixing clamp that will fit mirror arms of either 10-20mm or 16-28mm.

M200CE

e11 III 03*6624

Fitment ∅ 13-16mm | Radius 1200mm

Replacement Glass G200CE

M200FE

e11 III 03*6624

Fitment ∅ 13-16mm | Radius Flat

Replacement Glass G200FE

M2000CE

e11 III 03*6624

Fitment ∅ 10-20mm | Radius 1200mm

Replacement Glass G200CE

M2000FE

e11 III 03*6624

Fitment ∅ 10-20mm | Radius Flat

Replacement Glass G200FE

M0225CE

e4 II 02*5914

Fitment ∅ 20mm | Radius 1200mm

M310CE

e11 III 03*6635

Fitment ∅ 10-20mm | Radius 1200mm | M310CE Yellow

Replacement Glass G410CE

M3101CE

e11 III 03*6634

Fitment ∅ 10-20mm | Radius 1800mm

Replacement Glass G4101CE

M310FE

e11 III 03*6635

Fitment ∅ 10-20mm | Radius Flat

Replacement Glass G410FE

Heated version available,
may be subject to minimum quantity

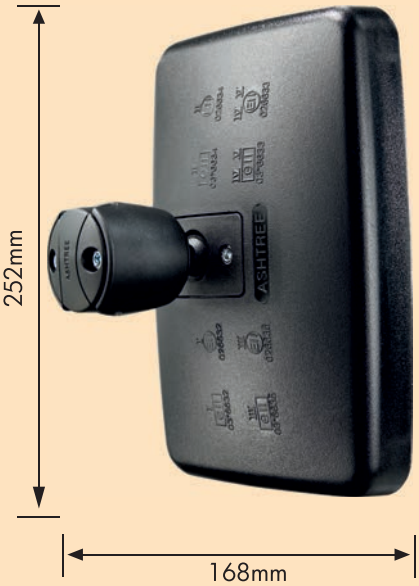

M310CEB

e11 III 03*6635

Fitment ∅ 16-28mm | Radius 1200mm | M310CEB Yellow

Replacement Glass G410CE

M3101CEB

e11 II 03*6634

Fitment ∅ 16-28mm | Radius 1800mm

Replacement Glass G4101CE

Heated version available,
may be subject to minimum quantity

M310FEB

e11 III 03*6635

Fitment ∅ 16-28mm | Radius Flat

Replacement Glass G410FE

M400CE

e11 III 02*1008

Fitment ∅ 13-16mm | Radius 1200mm

Replacement Glass G400CE

ASHTREE
VISION & SAFETY

M450CE

II 46R 048749

Fitment ∅ 10-20mm | Radius 1200mm

Replacement Glass G450CE

UNBREAKABLE MIRRORS

M450CEB

II 46R 048749

Fitment ∅ 16-28mm | Radius 1200mm

Replacement Glass G450CE

UNBREAKABLE MIRRORS

M410CE

e11 III 03*6627

Fitment ∅ 16-22mm | Radius 1200mm

Replacement Glass G410CE

M4101CE

e11 III 03*6628

Fitment ∅ 16-22mm | Radius 1800mm

Replacement Glass G4101CE

M500CE

e11 II 03*6623

Fitment ∅ 13-16mm | Radius 1800mm

Replacement Glass G500CE

M500FE

e11 III 03*6622

Fitment ∅ 13-16mm | Radius Flat

Replacement Glass G500FE

M440CE

e11 II & III 03*6619

Fitment ∅ 10-20mm | Radius 1200mm | M440CE Yellow

Replacement Glass G410CE

UNBREAKABLE MIRRORS

M440CEB

e11 II & III 03*6619

Fitment ∅ 16-28mm | Radius 1200mm | M440CEB Yellow

Replacement Glass G410CE

UNBREAKABLE MIRRORS

M5000CE

e11 III 03*6623

Fitment ∅ 10-20mm | Radius 1800mm

Replacement Glass: G500CE

M5000FE

e11 III 03*6622

Fitment ∅ 10-20mm | Radius Flat

Replacement Glass: G500FE

M528CE

e11 III 03*6126

Fitment ∅ 16-28mm | Radius 1800mm

Replacement Glass: G528CE

M520CE

e11 II 03*6636

Fitment ∅ 16-22mm | Radius 1800mm

Replacement Glass: G520CE

M5201CE

e11 III 03*6637

Fitment ∅ 16-22mm | Radius 1200mm

Replacement Glass: G5201CE

Heated version available,
may be subject to minimum quantity

M545CE

e11 II 03*6287

Fitment ∅ 10-20mm | Radius 1800mm

Replacement Glass: G545CE

M545CEB

e11 II 03*6287

Fitment ∅ 16-28mm | Radius 1800mm

Replacement Glass: G545CE

ASHTREE
VISION & SAFETY

M555CE

e11 II & III 03*6590

Fitment ∅ 10-20mm | Radius 1200mm | M555CE Yellow

Replacement Glass G555CE

UNBREAKABLE MIRRORS

M555CEB

e11 II & III 03*6590

Fitment ∅ 16-28mm | Radius 1200mm | M555CEB Yellow

Replacement Glass G555CE

UNBREAKABLE MIRRORS

M602CE

e11 II 03*6626

Fitment ∅ 16-22mm | Radius 1800mm

Replacement Glass G602CE

Heated version available,
may be subject to minimum quantity

M600CE

e11 II 02*3701

Fitment ∅ 16-22mm | Radius 1800mm

Replacement Glass G600CE

M600FE

e11 II 02*3701

Fitment ∅ 16-22mm | Radius Flat

Replacement Glass G600FE

M600CESW

e11 II 02*3701

Fitment ∅ 16-22mm | Radius 1800mm

Replacement Glass G600CE

Heated version available,
may be subject to minimum quantity

M600CESW version is supplied
complete with a handwheel

M610CE

e11 II 03*6643

Fitment ∅ 16-28mm | Radius 1800mm | M610CE Yellow

Replacement Glass G610CE

M6101CE

e11 III 03*6644

Fitment ∅ 16-28mm | Radius 1200mm

Replacement Glass G6101CE

Heated version available,
may be subject to minimum quantity

M613CE

e11 II 03*6638

Fitment Ø 16-22mm | Radius 1800mm

Replacement Glass: G613CE

Heated version available,
may be subject to minimum quantity

M626CE

e11 II 03*6125

Fitment Ø 16-28mm | Radius 1800mm

Replacement Glass: G626CE

M6261CE

e11 III 03*6125

Fitment Ø 16-28mm | Radius 1200mm

Replacement Glass: G6261CE

M0613CE

e3 II 02*56323

Fitment Ø 16-19mm | Radius 1800mm

Replacement Glass: G613CE

M0613CE-Black

e3 II 02*56323

Fitment Ø 16-19mm | Radius 1800mm

Replacement Glass: G613CE

Heated version available,
may be subject to minimum quantity

M640CEB

II 46R 048750

Fitment Ø 16-28mm | Radius 1200mm

Replacement Lens: G640CE

UNBREAKABLE MIRRORS

ASHTREE
VISION & SAFETY

M714CE

e11 II 03*6639

Fitment ∅ 16-28mm | Radius 1800mm | M714CE Yellow

Replacement Glass: G714CE

Heated version available,
may be subject to minimum quantity

M7141CE

e11 II 03*6640

Fitment ∅ 16-28mm | Radius 1200mm | M7141CE Yellow

Replacement Glass: G7141CE

M714FE

e11 II 03*6639

Fitment ∅ 16-28mm | Radius Flat

Replacement Glass: G714FE

M701CE

e11 II 03*6625

Fitment ∅ 16-22mm | Radius 1800mm

Replacement Glass: G701CE

Heated version available,
may be subject to minimum quantity

M725CEB

e11 II & III 03*6589

Fitment ∅ 16-28mm | Radius 1200mm | M725CEB Yellow

Replacement Glass: G725CE

UNBREAKABLE MIRRORS

M702CE

e11 II 03*6630

Fitment ∅ 16-22mm | Radius 1800mm | M702CE Yellow

Replacement Glass: G702CE

Heated version available,
may be subject to minimum quantity

M800CE

e11 III 03*6737

Fitment ∅ 16-28mm | Radius 1800mm

Replacement Glass: G800CE

Heated version available,
may be subject to minimum quantity

M820CE

e11 II 03*5957

Fitment ∅ 16-28mm | Radius 1800mm

Replacement Glass: G820CE

M807CE

e11 III 03*6741

Fitment ∅ 16-22mm | Radius 1800mm

Replacement Glass: G807CE

M8231CE

e11 II & III 03*6921

Fitment ∅ 16-28mm | Radius 1200mm

Replacement Glass: G8231CE

Wide Angle Mirrors - Class IV, V & VI

ASHTREE VISION & SAFETY

There are three types of wide angle mirror and each one performs a different function.

Class IV mirrors are wide angle mirrors that are used in conjunction with the drivers main mirror. The image to the right shows a wide angle mirror, in yellow, mounted on a truck.

Class V mirrors, also known as kerb mirrors, go over the near side door so the driver can view the nearside of the truck. The image on the left shows an Ashtree, class V, mirror being used to meet a visibility standard on construction machinery.

Class VI mirrors, also known as front view mirrors, go over the front screen and are used to give drivers visibility across the front of the truck. We mounted an Ashtree mirror onto a truck and an entire class of school children, who had previously been invisible to the driver, were suddenly visible.

ASHTREE
VISION & SAFETY

M238CE

e11 IV & V 03*6320

Fitment Ø 16-28mm | Radius 450mm

Replacement Glass: G238CE

M2381CE

e11 IV & V 03*6320

Fitment Ø 16-28mm | Radius 300mm

Replacement Glass: G2381CE

Heated version available,
may be subject to minimum quantity

M3102CE

e11 IV 03*6633

Fitment Ø 10-20mm | Radius 450mm

Replacement Glass: G4102CE

M3102CEB

e11 IV 03*6633

Fitment Ø 16-28mm | Radius 450mm

Replacement Glass: G4102CE

Heated version available,
may be subject to minimum quantity

M430CE

e11 IV 03*6404

Fitment Ø 10-20mm | Radius 300mm

Replacement Glass: G430CE

UNBREAKABLE MIRRORS

M430CEB

e11 IV 03*6404

Fitment Ø 16-28mm | Radius 300mm

Replacement Glass: G430CE

UNBREAKABLE MIRRORS

Heated version available,
may be subject to minimum quantity

M250CE

e11 IV & V 03*6843

Fitment Ø 10-20mm | Radius 300mm | M250CE Yellow

Replacement Glass: G250CE

UNBREAKABLE MIRRORS

M250CEB

e11 IV & V 03*6843

Fitment Ø 16-28mm | Radius 300mm | M250CEB Yellow

Replacement Glass: G250CE

UNBREAKABLE MIRRORS

Heated version available,
may be subject to minimum quantity

M430CEA1

e11 IV 03*6404

Radius 300mm

Replacement Glass: G430CE

The M430CEA1 comes complete with the S1090 arm.

Arm with 2 x 6mm slots at
40-60mm centres

S1090

Arm Only

ASHTREE
VISION & SAFETY

M455CE

IV 46R 048748

Fitment Ø 10-20mm

Replacement Glass G455CE

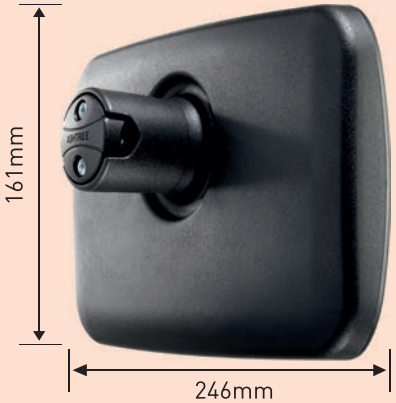

M455CEB

IV 46R 048748

Fitment Ø 16-28mm

Replacement Glass G455CE

M435CE

e11 IV & V 03*6588

Fitment Ø 10-20mm | Radius 300mm

Replacement Glass G435CE

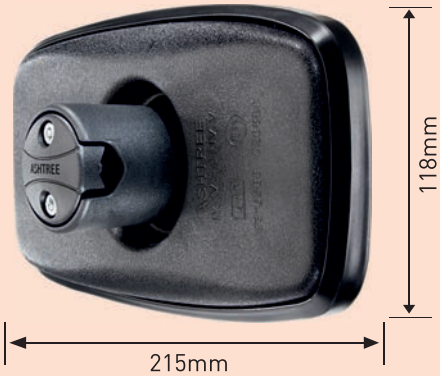

M435CE-Stud

e11 IV & V 03*6588

Fitment M6 Stud | Radius 300mm

Replacement Glass G435CE

M504CE

e11 IV 02*5465

Fitment Ø 16-22mm | Radius 450mm

Replacement Glass G504CE

M504CEA

e11 V 02*5465

Radius 450mm

Replacement Glass G504CE

M504CEA is the M504CE mirror complete with the S1216 arm

S1216

Arm only

Arm with 2 x 7mm slots at 75-80mm centres

M4402CE

e11 IV & V 03*8012

Fitment Ø 10-20mm | Radius 450mm

Replacement Glass G4402CE

UNBREAKABLE MIRRORS

M4402CEB

e11 IV & V 03*8012

Fitment Ø 16-28mm | Radius 450mm

Replacement Glass G4402CE

UNBREAKABLE MIRRORS

MX550CE

e11 VI 03*6447

Fitment Ø 10-20mm | Radius 250mm

Unbreakable lens

MX550CEB

e11 VI 03*6447

Fitment Ø 16-28mm | Radius 250mm

MX550CEA

e11 VI 03*6447

Radius 250mm

The MX550CEA comes complete with the S1091 arm. This is 440mm long and is 19mm in diameter. The clamp will fit arms of 16-28mm. This arm is available as a separate component.

S1091

Arm only

MX550CEA3

e11 VI 03*6447

Radius 250mm

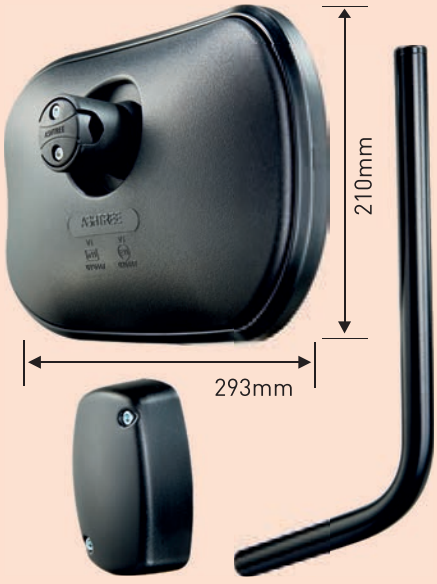

Unbreakable lens. Universal class VI mirror kit complete with arm and mounting bracket suitable for vertical or horizontal fitment.

M5601CE

e11 VI 46R 048505

Fitment Ø 10-20mm | Radius 300mm

M5601CEA

e11 VI 46R 048505

Fitment Ø 10-20mm | Radius 300mm

"B" versions of both mirrors are available with a clamp that fits 16-28mm diameter mirror arms

The M5601CEA comes complete with the S1091 arm. This is 440mm long and is 19mm in diameter. The clamp will fit arms of 16-28mm. This arm is available as a separate component.

S1091

Arm only

MX635CE

e11 VI 03*6343

Fitment Ø 10-20mm | Radius 225mm

MX6351CE

e11 IV & V 03*6343

Fitment Ø 10-20mm | Radius 330mm

Unbreakable lens

"B" versions of both mirrors are available with a clamp that fits 16-28mm diameter mirror arms

Powered & Adjustable Mirrors

ASHTREE
VISION & SAFETY

Powered mirrors are popular on vehicles and machines where it's not practical for the driver to adjust a standard mirror or where two different fields of visibility are required. Ashtree have both single and twin lens mirrors for this purpose. Part number M926CE, seen right and below, can be used on construction machinery and also small trucks and buses.

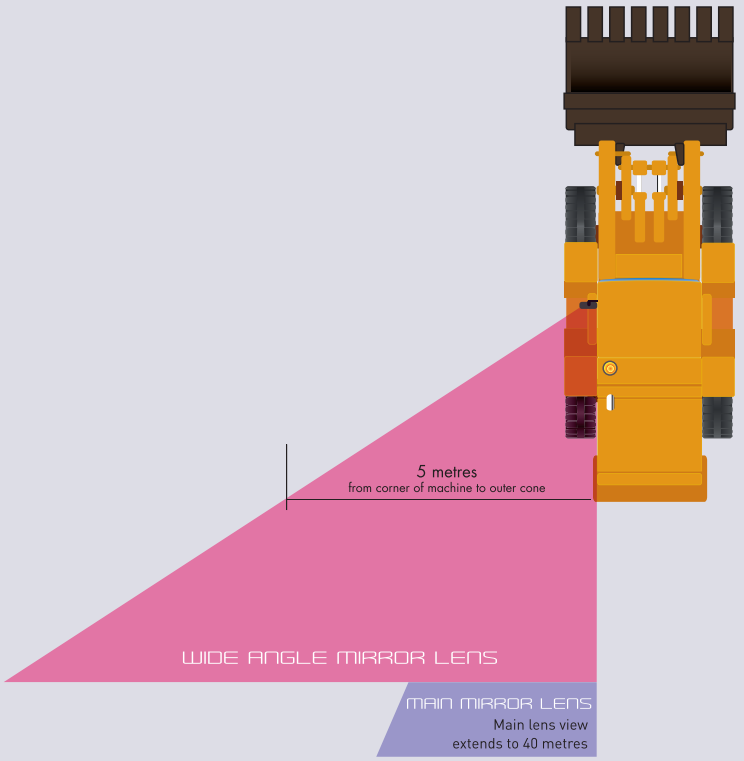

These images show what it can do on construction equipment but the field of visibility obtained on a bus can be seen on page 19.

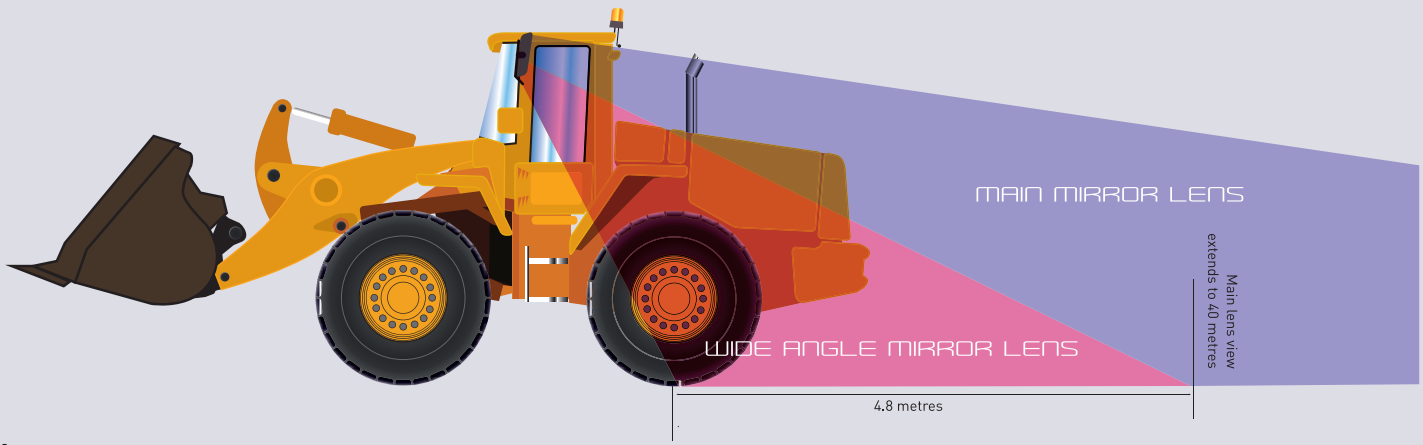

ASHTREE
VISION & SAFETY

M912CEH

e11 II 03*6645

Fitment ∅ 16-28mm | Radius 1800mm

Replacement Glass: G714CEHc

Electrically adjustable
and heated

M920CEH

e11 II IV 03*6288

Fitment ∅ 16-28mm | Radius 1800mm Main Lens

Radius 300mm Wide Angle Lens

Replacement Glass: G714CEHc | Replacement Glass: G2371CEHc

Electrically adjustable
and heated

M9201CEH

e11 II IV 03*6288

Fitment ∅ 16-28mm | Radius 1200mm Main Lens

Radius 300mm Wide Angle Lens

Replacement Glass: G7141CEHc | Replacement Glass: G2371CEHc

M915CEH

e11 II 03*6203

Fitment ∅ 16-28mm | Radius 1800mm

Replacement Glass: G714CEHc

M9151CEH

e11 III 03*6203

Fitment ∅ 16-28mm | Radius 1200mm

Replacement Glass: G7141CEHc

M916CEH

e11 II 03*6203

Fitment ∅ 16-28mm | Radius 1800mm

Replacement Glass: G714CEHc

M915CEH & M9151CEH
Electrically adjustable & heated

M916CEH
Hand adjustable & heated

M922CEH

e11 II IV 03*6641

Fitment ∅ 16-28mm | Radius 1800mm Main Lens

Radius 300mm Wide Angle Lens

Replacement Glass: G536CEHc | Replacement Glass: G2231CEHc

Electrically adjustable
and heated

ASHTREE
VISION & SAFETY

M923CEH

e11 II IV 03*6641

Fitment ∅ 16-28mm | Radius 1800mm — Main Lens

Radius 300mm — Wide Angle Lens

Replacement Glass G536CEHc | Replacement Glass G2231CEHc

M9231CEH

e11 II IV 03*6642

Fitment ∅ 16-28mm | Radius 1200mm — Main Lens

Radius 300mm — Wide Angle Lens

Replacement Glass G5361CEHc | Replacement Glass G2231CEHc

Both versions are hand adjustable & heated

M926CE

E11 II, III & IV 048173

Fitment ∅ 16-28mm | Radius 1200mm — Main Lens

Radius 300mm — Wide Angle Lens

M926CE Yellow | UNBREAKABLE MIRRORS

M925CEH

E11 II, III & IV 048173

Fitment ∅ 16-28mm | Radius 1200mm — Main Lens

Radius 300mm — Wide Angle Lens

UNBREAKABLE MIRRORS

M926CE - Manually adjustable.
M926CEH - Manually adjustable and heated.
Requires the Y3098 cable, on page 19, to run power to the mirror.

M925CEH - Power adjustable and heated. Requires 2 x Y3107 cables, on page 19, to run power to the mirror.

This image shows the extra visibility we got when the M926CE/M925CEH was mounted onto a wheeled loader. Visibility right up to the rear axle was possible, this is the area that most standard mirrors do not pick up.

Y2677-24

24 volt

Y2677-12

12 volt

4 way mirror adjustment switch (both sides). Complete with 2 metres of cable. Dimensions: 47mm x 38mm to fit hole 44mm x 33mm

Y2678

12-24 volt switch to operate 2 x twin lens mirrors, with 2 metre cable

Y3098

2 pin male plug with 1.5m wire for use with M926CEH mirrors

Y3107

6 pin male round plug with 3.5m wire for use with M925CEH mirrors

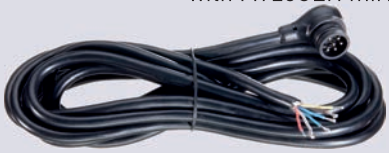

Y2675

6 way plug with 2 metre cable

Y2676

2 way plug with 2 metre cable ("L" connection)

Y2177

2 way plug with 2 metre cable straight connection)

ASHTREE VISION & SAFETY

CYCLE SAFE™

You can't see me in your mirror...but I am here!!!

The image above shows the drivers view using one of the most popular mirrors on UK buses. The road cones show the outer limits of the drivers visibility. Some other mirrors used are even smaller than this, further restricting visibility.

When the Ashtree Cyclesafe twin lens mirror is fitted we have a completely different view. The invisible cyclist is now fully visible, as is the kerb and the door way.

Unbreakable Mirrors

ASHTREE VISION & SAFETY

Ashtree unbreakable mirrors are trusted and used around the world in many different applications. As can be seen on the image on the left (top), they can withstand serious product testing by the armed forces. The image to the left (bottom) shows the sleek design of the mirrors for road going applications.

As with all Ashtree products universal fitment is something we look to design into the product. Mirrors will fit either 10-20mm or 16-28mm mirror arms depending on the clamp chosen.

MX250CE

e11 IV & V 03*6843

Fitment ∅ 10-20mm | Radius 300mm | MX250CE Yellow

Replacement Lens: GX250CE

MX250CEB

e11 IV & V 03*6843

Fitment ∅ 16-28mm | Radius 300mm | MX250CEB Yellow

Replacement Lens: GX250CE

208mm

155mm

208mm

240mm

Heated version available, may be subject to minimum quantity

MX430CE

e11 IV 03*6404

Fitment ∅ 10-20mm | Radius 300mm

Replacement Lens: GX430CE

MX430CEB

e11 IV 03*6404

Fitment ∅ 16-28mm | Radius 300mm

Replacement Lens: GX430CE

MX4402CE

e11 IV & V 03*8012

Fitment ∅ 10-20mm | Radius 450mm

Replacement Lens GX4402CE

MX4402CEB

e11 IV & V 03*8012

Fitment ∅ 16-28mm | Radius 450mm

Replacement Lens GX4402CE

MX450CE

II 46R 048749

Fitment ∅ 10-20mm | Radius 1200mm

Replacement Glass GX450CE

MX450CEB

II 46R 048749

Fitment ∅ 16-28mm | Radius 1200mm

Replacement Glass GX450CE

MX440CE

e11 II & III 03*6619

Fitment ∅ 10-20mm | Radius 1200mm | MX440CE Yellow

Replacement Lens GX440CE

MX440CEB

e11 II & III 03*6619

Fitment ∅ 16-28mm | Radius 1200mm | MX440CEB Yellow

Replacement Lens GX440CE

ASHTREE
VISION & SAFETY

MX635CE

e11 VI 03*6343

Fitment Ø 10-20mm | Radius 225mm

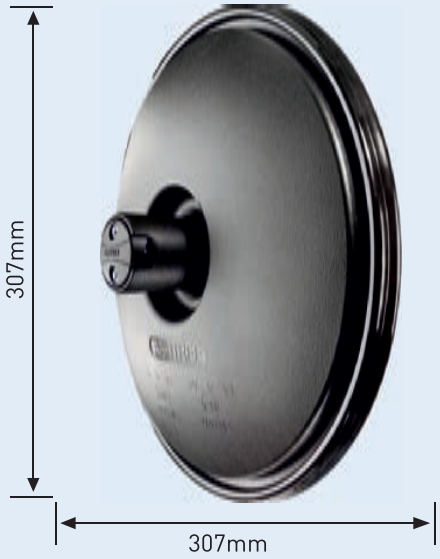

MX6351CE

e11 IV & V 03*6343

Fitment Ø 10-20mm | Radius 330mm

Unbreakable lens

"B" versions of both mirrors are available with a clamp that fits 16-28mm diameter mirror arms

MX550CE

e11 VI 03*6447

Fitment Ø 10-20mm | Radius 250mm

MX550CEB

e11 VI 03*6447

Fitment Ø 16-28mm | Radius 250mm

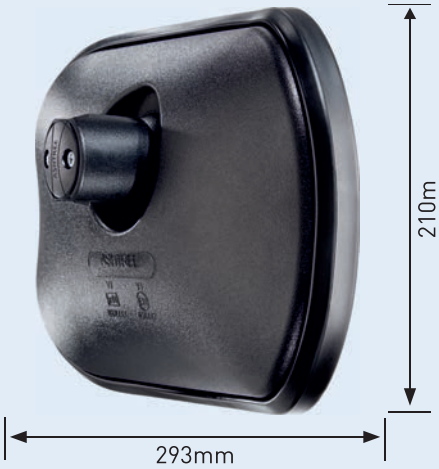

Unbreakable lens

MX640CEB

II 46R 048750

Fitment Ø 16-28mm | Radius 1200mm

Replacement Lens GX640CE

MX555CE

e11 II & III 03*6590

Fitment Ø 10-20mm | Radius 1200mm | MX555CE Yellow

Replacement Lens GX555CE

MX555CEB

e11 II & III 03*6590

Fitment Ø 16-28mm | Radius 1200mm | MX555CEB Yellow

Replacement Lens GX555CE

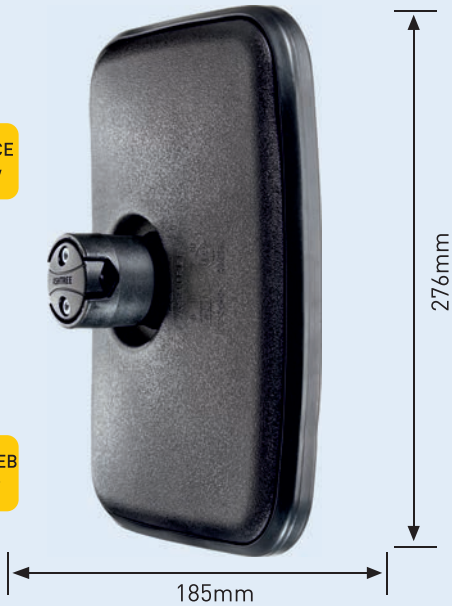

MX725CEB

e11 II & III 03*6589

Fitment Ø 16-28mm | Radius 1200mm | MX725CEB Yellow

Replacement Lens: GX725CE

MX926CE

E11 II, III & IV 048173

Fitment Ø 16-28mm | Radius 1200mm — Main Lens

Radius 300mm — Wide Angle Lens

MX925CEH

E11 II, III & IV 048173

Fitment Ø 16-28mm | Radius 1200mm — Main Lens

Radius 300mm — Wide Angle Lens

Heated version available,
may be subject to minimum quantity

MX926CE - Manually adjustable
MX926CEH-manually adjustable but heated mirror-requires the Y3098 cable shown on page 19.
MX925CEH-electrically powered mirror-requires 2 x Y3107 cable shown on page 19.

MX943

Fitment Ø 10-20mm | Radius 100mm

MX948

Fitment Ø 10-20mm | Radius 150mm

MX948B

Fitment Ø 16-28mm | Radius 150mm

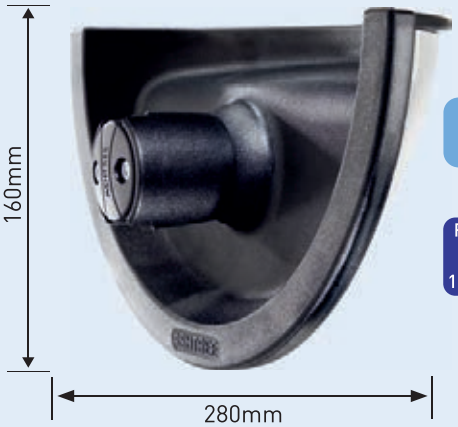

Interior Mirrors

ASHTREE
VISION & SAFETY

Interior mirrors can be used to help drivers and operators gain enhanced visibility where danger may be present. The Ashtree range covers many applications. There are wide angle mirror like the MX943, see images above. On materials handling and construction equipment these are widely used as they give the operator almost 180 degrees of vision. Buses and other vehicles tend to favour smaller radii of curvature as they don't have the same visibility requirements. Ashtree also have observation mirrors that can be mounted onto handrails on buses so that drivers can observe the inside of the vehicle, especially useful if the bus has a second set of doors. Part number S1173 on pages 26 and 27 can be used to mount almost any mirror onto a handrail.

ASHTREE
VISION & SAFETY

M310CEA1

e11 I 03*6632

Radius 1200mm

Replacement Glass G410CE

M310FEA1

e11 I 03*6632

Radius Flat

Replacement Glass G410FE

Mounting bracket has two 7mm slots at 75-80mm centres

M3102CEA1

e11 V 03*6633

Radius 450mm

Replacement Glass G4102CE

M2000CEA2

e11 III 03*6624

Radius 1200mm

Replacement Glass G200CE

M2000FEA2

e11 III 03*6624

Radius Flat

Replacement Glass G200FE

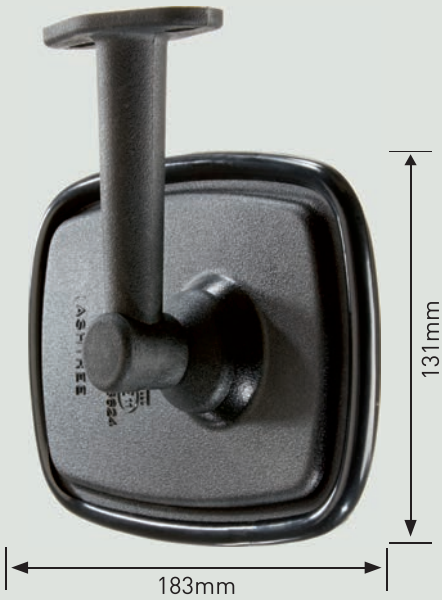

Mounting bracket has two M6 slots that fasten at 40-60mm centres

M435CE

e11 IV & V 03*6588

Fitment ∅ 10-20mm

Radius 300mm

Replacement Glass G435CE

M435CE-Stud

e11 IV & V 03*6588

Fitment M6 Stud

Radius 300mm

Replacement Glass G435CE

M235C

Fitment M6 Stud

Radius 200mm

ASHTREE
VISION & SAFETY

MX943

Fitment Ø 10-20mm

Radius 100mm

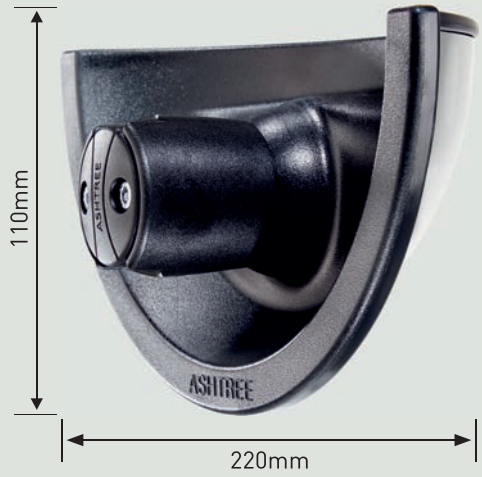

M435CEA2

e11 IV & V 03*6588

Radius 300mm

Mounting bracket has two M6 slots that fasten at 40-60mm centres

MX943A2

Radius 100mm

Mounting bracket has two M6 slots that fasten at 40-60mm centres

M631CA

with S1173 mirror arm

Radius 1800mm

M631

Mirror head only

Fitment Ø 10-20mm

Radius 1800mm

S1173

Arm and bracket only

Mounts onto 35mm diameter poles

M245C

Mirror only

Fitment ∅ 10-20mm | Radius 450mm

S1173

Arm and bracket only

S1173 arms can be used if this mirror is to be used as an observation mirror on buses.

Mounts onto 35mm diameter poles

S1230

This mirror arm can be used for mounting mirrors onto a horizontal or vertical surface. Adjust the arm to the correct angle and then tighten the bolt in the bracket to create a stable mounting point for your mirror.

M560C

Mirror only

Fitment ∅ 10-20mm | Radius 450mm

S1173

Arm and bracket only

S1173 arms can be used if this mirror is to be used as an observation mirror on buses.

Mounts onto 35mm diameter poles

Safety Mirrors

ASHTREE
VISION & SAFETY

Safety mirrors are now widely used on all different types of machine and application. At one time any mirror would do but these days a more considered approach is taken. Stricter visibility standards, designed to reduce and prevent accidents, mean better quality solutions are now required. Ashtree products are specially designed to meet these stricter requirements.

Ashtree mirrors are used on machinery such as loading shovels, agricultural machinery, telehandlers, truck mounted fork lifts and materials handling equipment.

ASHTREE
VISION & SAFETY

MX941

Unbreakable lens

Fitment ∅ 13-16mm

Radius 450mm

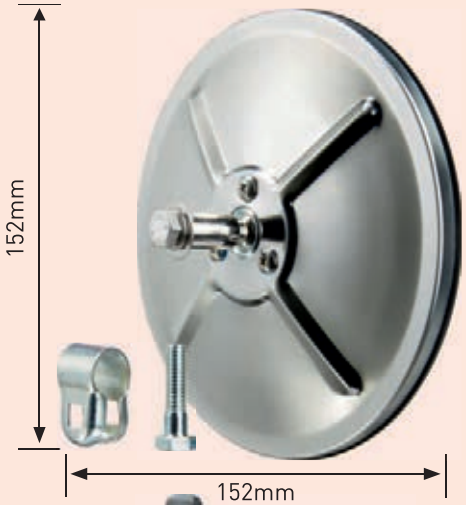

MX941A

Unbreakable lens

Radius 450mm

MX941A
Complete with arm that has
2 x 7mm slots at
75-80mm centres

MX941B

Unbreakable lens

Fitment ∅ 16-28mm

Radius 450mm

MX941B
complete with clamp for fitment to
16-28mm diameter arms

M245C-42

Fitment ∅ 25-42mm

Radius 450mm

This mirror is available with different radii of glass - may be subject to minimum quantities.

M5601CE

e11 VI 46R 048505

Fitment ∅ 10-20mm

Radius 300mm

M5601CEA

e11 VI 46R 048505

Fitment ∅ 10-20mm

Radius 300mm

"B" versions of both mirrors are available with a clamp that fits 16-28mm diameter mirror arms

M560C-42

Fitment ∅ 25-42mm

Radius 450mm

This mirror is available with different radii of glass - may be subject to minimum quantities.

ASHTREE
VISION & SAFETY

MX942B

Unbreakable lens

Fitment ∅ 16-28mm

Radius 100mm

MX942

Unbreakable lens

Fitment ∅ 13-16mm

Radius 100mm

MX943

Unbreakable lens

Fitment ∅ 10-20mm

Radius 100mm

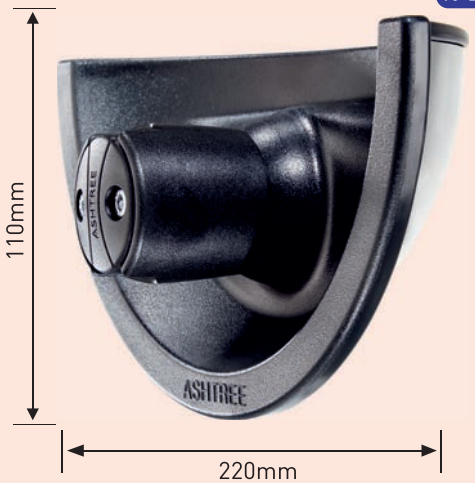

MX942A

Radius 100mm

Complete with arm that has
2 x 7mm slots at
75-80mm centres

MX948

Unbreakable lens

Fitment Ø 10-20mm | Radius 150mm

MX948B

Unbreakable lens

Fitment Ø 16-28mm | Radius 150mm

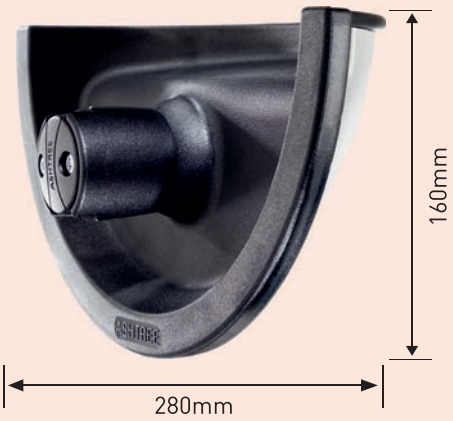

MX950-Tunnel

Unbreakable lens

Fitment Ø 19mm Stem | Radius 125mm - 185mm

MX951-Tunnel

Unbreakable lens

Fitment Ø 19mm Stem | Radius 125mm - 185mm

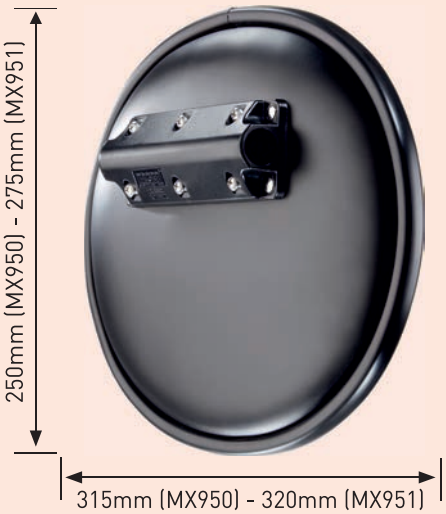

MX950-Stud

Unbreakable lens

Fitment 3/8" UNC STUD | Radius 125mm - 185mm

MX951-Stud

Unbreakable lens

Fitment 3/8" UNC STUD | Radius 125mm - 185mm

MX950B and MX951B versions come complete with clamp for fitment to 16-28mm diameter mirror arms

MX952

Unbreakable lens

Fitment Twin Stud at 115mm | Radius 200mm

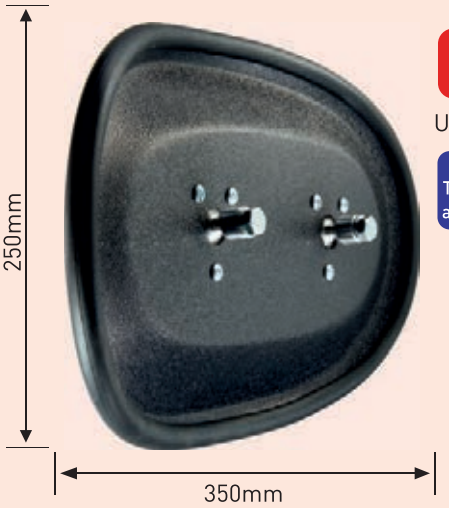

Mirror Glass

ASHTREE VISION & SAFETY

After a few years of simply importing and distributing glasses Ashtree made a decision to open a dedicated glass cutting department in 1982. It's quite a grand title but at the time it was only one person who cut the glass using manual glass cutting equipment. It's all changed since then. We now have three automatic glass cutting machines as well as a semi automatic machine for cutting deep radius glass.

After the glass has been cut it is shatter proofed to European Union standards using the automated glass taping machine that we had specially built for the job.

The following pages show the standard range of glasses that we keep in stock. We can also cut glass to customers requirements, subject to minimum quantities.

G200CE	177 x 125	**ASHTREE M2000CE / M200CE / M2000CEA2** / Universal 7 inch x 5 inch	Convex (1200r)
G200FE	177 x 125	**ASHTREE M2000FE / M200FE / M2000FEA2** / Universal 7 inch x 5 inch	Flat
G209CE	203 x 130	**ASHTREE MO209CE** / Land Rover (new model) / Sherpa / Leyland DAF 200 / 400	Convex (1200r)
G2231CEHc	185 x 95	**ASHTREE M922CEH / M922FEH / M923CEH / M923FEH**	Convex (300r)
G223CEHc	185 x 95	**ASHTREE M902CEH / M9021CEH / M902FEH / M903CEH / M9031CEH / M903FEH**	Convex (400r)
GW232CE	174 X 129	**ASHTREE M925CEH/M926CE** wide angle mirror lens with backplate	Convex (300)
G2371CEHc	173 X 176	**ASHTREE M920CEH / M9201CEH**	Convex (300r)
G2381CE	174 X 174	**ASHTREE M2381CE**	Convex (300r)
G2382CE	174 X 174	**ASHTREE M2382CE**	Convex (200r)
G238CE	174 x 174	**ASHTREE M238CE**	Convex (400r)
G250CE	198 x 198	**ASHTREE M250CE/M250CEB**	Convex (300r)
G400CE	234 x 155	**ASHTREE M400CE / DESMO 355**	Convex (1200r)
G4101CE	236 x 152	**ASHTREE M3101CE / M3101CEB / M4101CE**	Convex (1800r)
G4102CE	236 x 152	**ASHTREE M3102CE / M3102CEA1 / M4102CE**	Convex (400r)
G410CE	236 x 152	**ASHTREE M310CE / M310CEB / M310CEA1 / M410CE / M440CE / M440CEB / M440CEA2**	Convex (1200r)
G410FE	236 x 152	**ASHTREE M310FE / M310FEB / M310FEA1**	Flat
G422CE	229 x 147	LDV Convoy (left hand)	Convex (1800r)
G423CE	230 x 150	LDV Convoy (right hand)	Convex (1800r)
G430CE	235 x 150	**ASHTREE M430CE / M430CEB / M430CEA1 / M430CESW**	Convex (300r)
GW433CE	236 x 172	**ASHTREE M925CEH/M926CE** large mirror lens with backplate	Convex (1200)
G435CE	210 x 112	**ASHTREE M435CE / M435CEA2**	Convex (300r)
G4402CE	236 x 151	**ASHTREE M4402CE/M4402CEB**	convex (450r)
G450CE	226 x 170	**ASHTREE M450CE / M450CEB**	Convex (1200)
G455CE	226 x 170	**ASHTREE M455CE / M455CEB**	Convex (300r)
G500CE	253 x 153	**ASHTREE M5000CE / M500CE** / Universal 10" x 6"	Convex (1800r)
G500FE	253 x 153	**ASHTREE M5000FE / M500FE** / Universal 10" x 6"	Flat
G504CE	250 x 150	**ASHTREE M504CE / M504CEA** / Scania	Convex (400r)
G508CE	253 x 151	Street sweepers / Renault Master / Traffic & 50	Convex (1800r)
G5201CE	291 x 170	**ASHTREE M5201CE**	Convex (1200r)
G520CE	291 x 170	**ASHTREE M520CE** / Mercedes / Duple	Convex (1800r)
G528CE	281 x 201	**ASHTREE M528CE** / John Deere	Convex (1800r)
G530CE	271 x 193	John Deere	Convex (1800r)
G5361CEHc	255 x 170	**ASHTREE M9021CEH / M9031CEH / M9221CEH / M9231CEH**	Convex (1200r)
G536CEHc	255 x 170	**ASHTREE M902CEH / M903CEH / M922CEH / M923CEH**	Convex (1800r)
G545CE	248 X 190	**ASHTREE M545CE / M545CEB**	Convex (1800r)
G555CE	255 X 175	**ASHTREE M555CE / M555CEB / M555CEA2**	Convex (1200r)
G600CE	300 x 210	**ASHTREE M600CE / M600CES / M600CESW** / Volvo / Scania	Convex (1800r)
G600FE	300 x 210	**ASHTREE M600FE / M600FES**	Flat
G601CE	337 x 193	**ASHTREE M601CE / M601CES** / Raydyot CM500	Convex (1800r)
G602CE	331 x 214	**ASHTREE M602CE** / Bedford / Seddon Atkinson / Foden / ERF / Britax	Convex (1800r)
G6101CE	309 x 178	**ASHTREE M6101CE**	Convex (1200r)
G610CE	309 x 178	**ASHTREE M610CE** / MAN / VW	Convex (1800r)
G613CE	347 x 196	**ASHTREE M613CE / MO613CE / M6013CE-BLACK** / Iveco / Ford Eurocargo / Seddon Atkinson	Convex (1800r)
G624CE	300 x 214	Steyr / KHD	Convex (1800r)
G6261CE	315 x 225	**ASHTREE M6261CE**	Convex (1200r)
G626CE	315 x 225	**ASHTREE M626CE** / Case / McCormick / Massey Ferguson / New Holland	Convex (1800r)
G627CE	321 x 182	Valmet	Convex (1800r)
G629CE	304 x 218	Deutz	Convex (1800r)
G640CE	310 x 205	**ASHTREE M640CE / M640CEB**	Convex (1200)
G701CE	375 x 190	**ASHTREE M701CE** / Ford Cargo / Leyland / DAF / Foden / Volvo / Plaxton	Convex (1800r)
G702CE	356 x 170	**ASHTREE M702CE / MO702CE** / Mercedes / Duple	Convex (1800r)
G703CE	396 x 208	**ASHTREE M703CE** / ERF / AWD / Foden	Convex (1800r)
G7141CE	362 x 174	**ASHTREE M7141CE**	Convex (1200r)
G714CE	362 x 174	**ASHTREE M714CE** / Volvo / Magirus Deutz / MAN / Iveco	Convex (1800r)
G714CEHc	362 x 174	**ASHTREE M912CEH**	Convex (1800r)
G714FE	362 x 174	**ASHTREE M714FE**	Flat
G725CE	381 X 182	**ASHTREE M725CEB**	Convex (1200r)
G800CE	415 x 220	**ASHTREE M800CE** / Scania	Convex (1800r)
G801CE	407 x 184	**ASHTREE MO801CE** / Mercedes	Convex (1800r)
G802CE	430 x 193	**ASHTREE M802CE** / Volvo	Convex (1800r)
G811CE	405 x 190	Irizar coach	Convex (1800r)
GW815CEH	430x200	Scania 4 series main mirror lens with backplate	convex (1800)
G820CE	402 X 209	**ASHTREE M820CE**	Convex (1800r)
G8231CE	409 x 209	**ASHTREE M8231CE**	Convex (1200)
GW927CEH	370 x 173	**ASHTREE M927CEH**	Convex (1200)

MIRROR GLASS

ASHTREE VISION & SAFETY

G200CE 177 x 125
ASHTREE M2000CE / M200CE / M2000CEA2
G200FE 177x 125
ASHTREE M2000FE / M200FE / M2000FEA2
Universal 7 inch x 5 inch

G209CE 203 x 130
ASHTREE MO209CE
Land Rover (new model)
Sherpa / Leyland DAF 200 / 400

G2231CEHc 185 x 95
ASHTREE M922CEH / M922FEH / M923CEH / M923FEH

G223CEHc 185 x 95
ASHTREE M902CEH / M9021CEH / M902FEH M903CEH / M9031CEH / M903FEH

GW232CE
ASHTREE M925CEH/M926CE WIDE ANGLE LENS

G2371CEHc 173 x 176
ASHTREE M920CEH / M9202CEH
G2371CEHc 173 x 176
ASHTREE M920CEH / M9201CEH

G238CE 174 x 174
ASHTREE M238CE
G2381CE 174 x 174
ASHTREE M2381CE

G250CE 198 x 198
ASHTREE M250CE / M250CEB

G400CE 234 x 155
ASHTREE M400CE / DESMO 355
G4001CE 234 x 155
ASHTREE M4001CE / DESMO 365

G4101CE 236 x 152
ASHTREE M3101CE / M3101CEB / M4101CE
G4102CE 236 x 152
ASHTREE M3102CE / M3102CEA1 / M4102CE
G410CE 236 x 152
ASHTREE M310CE / M310CEB / M310CEA1 / M410CE / M440CE / M440CEB / M440CEA2
G410FE 236 x 152
ASHTREE M310FE / M310FEB / M310FEA1

G422CE 229 x 147
LDV Convoy (left hand)

G423CE 230 x 150
LDV Convoy (right hand)

GW427CEL
Transit LHS 2000 on

GW427CER
Transit RHS 2000 on

G430CE 235 x 150
ASHTREE M430CE / M430CEB / M430CEA1 / M430CESW

GW433CE
ASHTREE M925CEH/M926CE MAIN LENS

G435CE 210 x 112
ASHTREE M435CE / M435CEA2

G4402CE 236 x 151
ASHTREE M4402CE / M4402CEB

G450CE 226 x 170
ASHTREE M450CE

G455CE 240 x 155
ASHTREE M455CE

G500CE 253 x 153
ASHTREE M5000CE / M500CE
G500FE 253 x 153
ASHTREE M5000FE / M500FE

G504CE 250 x 150
ASHTREE M504CE / M504CEA
Scania

G508CE 253 x 151
ASHTREE MO508CE / MO508CEA
Street sweepers / Renault Master / Traffic & 50

G520CE 291 x 170
ASHTREE M520CE
Mercedes / Duple
G5201CE 291 x 170
ASHTREE M5201CE

G528CE 281 x 201
ASHTREE M528CE
John Deere

G530CE 271 x 193
John Deere

G5361CEHc 258 x 175
ASHTREE M9021CEH / M9031CEH / M9221CEH / M9231CEH
G536CEHc 258 x 175
ASHTREE M902CEH / M903CEH / M922CEH / M923CEH

ASHTREE
VISION & SAFETY

MIRROR GLASS

G545CE 248 x 190
ASHTREE M545CE / M545CEB

G555CE 255 x 175
ASHTREE M555CE / M555CEB / M555CEA2

G600CE 300 x 210
ASHTREE M600CE / M600CES / M600CESW
Volvo Scania
G600FE 300 x 210
ASHTREE M600FE / M600FES

G601CE 337 x 193
ASHTREE M601CE / M601CES
Raydyot CM500

G602CE 331 x 214
ASHTREE M602CE
Bedford / Seddon Atkinson / Foden / ERF / Britax

G610CE 309 x 178
ASHTREE M610CE
MAN / VW
G6101CE 309 x 178
ASHTREE M6101CE

G613CE 347 x 196
ASHTREE M613CE / MO613CE / M6013CE-BLACK
Iveco / Ford Eurocargo / Seddon Atkinson

G624CE 300 x 214
Steyr / KHD

G626CE 315 x 225
ASHTREE M626CE
Case / McCormick / Massey Ferguson / New Holland
G6261CE 315 x 225
ASHTREE M6261CE

G627CE 321 x 182
Valmet

G629CE 304 x 218
Deutz

G640CE 310 x 205
ASHTREE M640CE

G701CE 375 x 190
ASHTREE M701CE
Ford Cargo / Leyland / Daf / Foden / Volvo / Plaxton

G702CE 356 x 170
ASHTREE M702CE / MO702CE
Mercedes / Duple

G703CE 396 x 208
ASHTREE M703CE
ERF / AWD / Foden

G714CE 362 x 174 **- ASHTREE M7141CE**
G7141CEHc 362 x 174
ASHTREE M9121CEH / M9151CEH / M9161CEH / M920CEH / M9201CEH / M9202CEH / M9203CEH
G714CE **- ASHTREE M714CE**
Volvo / Magirus Deutz / MAN / Iveco
G714CEHc
ASHTREE M912CEH / M915CEH / M916CEH / M920CEH
G714FE **- ASHTREE M714FE**
G714FEHc **- ASHTREE M912FEH**

G725CE 381 x 182
ASHTREE M725CEB

G800CE 415 x 220
ASHTREE M800CE
Scania

MIRROR GLASS

ASHTREE VISION & SAFETY

G801CE 407 x 184
ASHTREE MO801CE
Mercedes

G802CE 430 x 193
Ashtree M802CE
Volvo

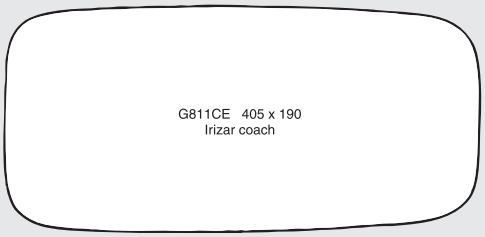

G811CE 405 x 190
Irizar coach

GW815CEH
SCANIA 4 SERIES MAIN MIRROR

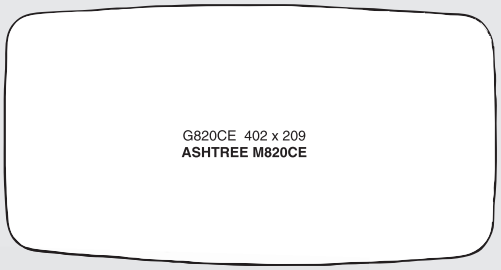

G820CE 402 x 209
ASHTREE M820CE

G8231CE 409 x 209
- ASHTREE M8231CEB

GW927CEH
ASHTREE M927CEH

Heating Elements

HEATING ELEMENTS

The Ashtree range of heating elements are designed to cover the largest possible range of heated mirrors currently in use. All elements are 24 volt but 12 volt versions are also available in certain sizes.

Y2610	318 x 175mm	24Volt
Y2611	173 x 137mm	24Volt
Y2611-12	173 x 137mm	12Volt
Y2613	160 x 160mm	24Volt
Y2614	208 x 173mm	24Volt
Y2615	385 x 165mm	24Volt
Y2616	410 x 190mm	24Volt
Y2618	310 x 130mm	24Volt
Y2618-12	310 x 130mm	12Volt
Y2619	250 x 145mm	24Volt
Y2619-12	250 x 145mm	12Volt
Y2621	145 x 70mm	24Volt
Y2621-12	145 x 70mm	12Volt

Mirror Arms

ASHTREE
VISION & SAFETY

The perfect mirror for any vehicle or machine would be devalued if the wrong mirror arm was chosen.

Ashtree have been manufacturing mirror arms since 1989 when the Desmo mirror arm business was acquired. We still manufacture those original mirror arms but the Ashtree range has since evolved and we have different sizes, styles and designs for many different applications. We also have the capacity to manufacture to customer specific designs.

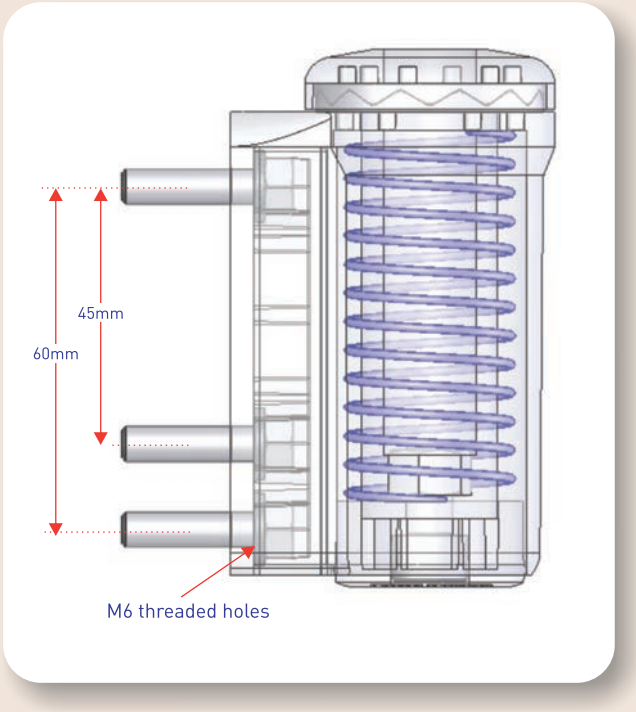

Ashtree's S900 series of arms are designed to be both strong and flexible. The main body is moulded from a high impact polymer for greater strength, less vibration and a lower weight but the arms have two sets of opposing teeth made of zinc. This design feature helps to reduce wear between the two surfaces when the arms index. Most other mirror arms index at 45 degree increments, at best, but the S900 range adjust at 20 degree increments. This helps obtain the best possible viewing position for the mirror. Mounting the mirror couldn't be simpler. There are three M6 threaded holes set at either 45mm or 60mm centres or part number Y2089 can be used to mount them externally.

The S900 series of mirror arms are protected by UK patent GB2474435B

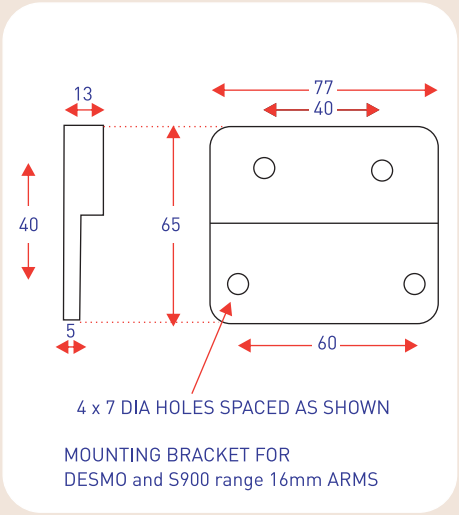

Y2089

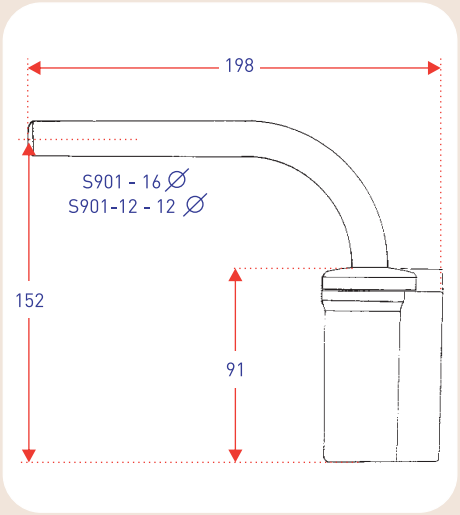

S901 & S901-12

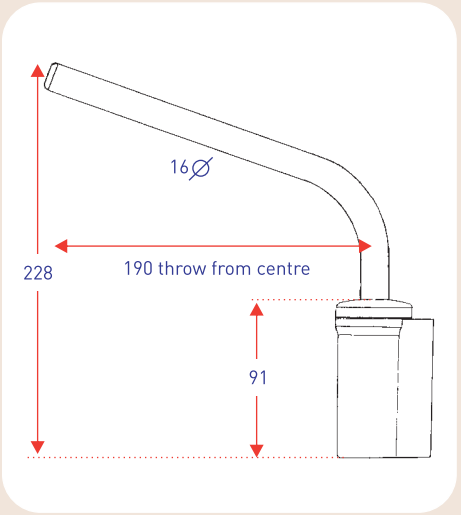

S902

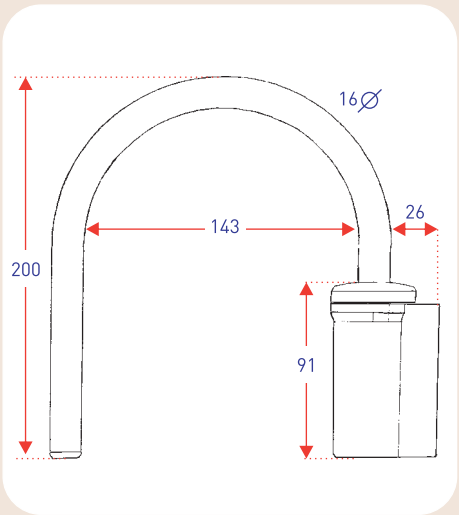

S903

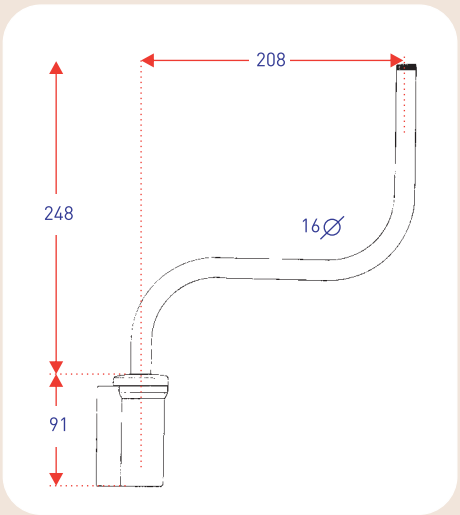

S904

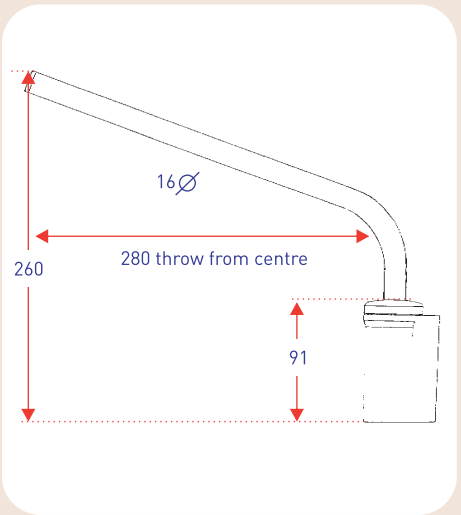

S905

ASHTREE
VISION & SAFETY

These arms were originally manufactured by Desmo until the purchase of the Desmo business by Ashtree in 1989, when production was moved to Bradford. For many years they were the standard arm used in the UK bus industry and are still widely used on construction equipment and municipal vehicles. With an all zinc, diecast, body the 16mm diameter tube will adjust in 45 degree increments. The cap has three threaded holes so the arms can be adjusted to a new start point, 15 degrees on either side of the factory set position, to make it easier to get the best possible field of visibility. These arms are mounted on two M6 threaded holes at 60mm centres.

All dimensions in mm unless otherwise stated

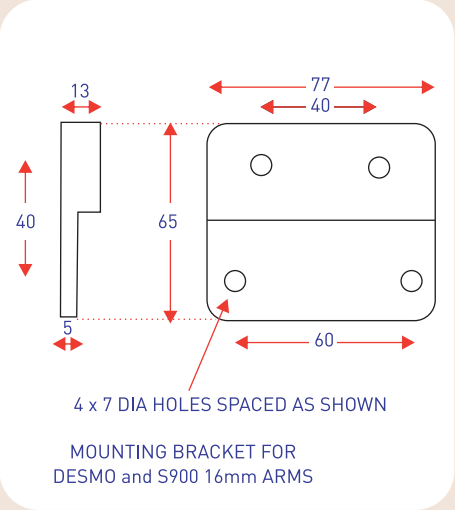

Y2089

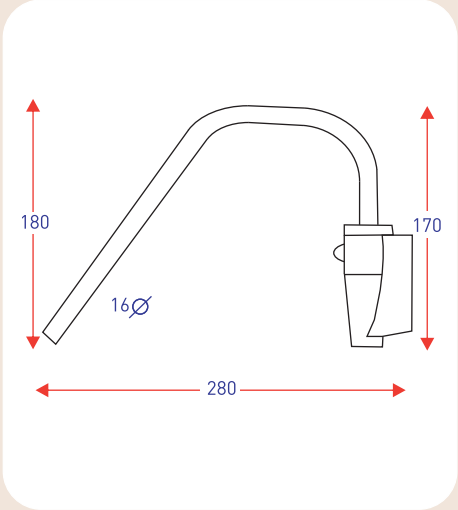

S1186

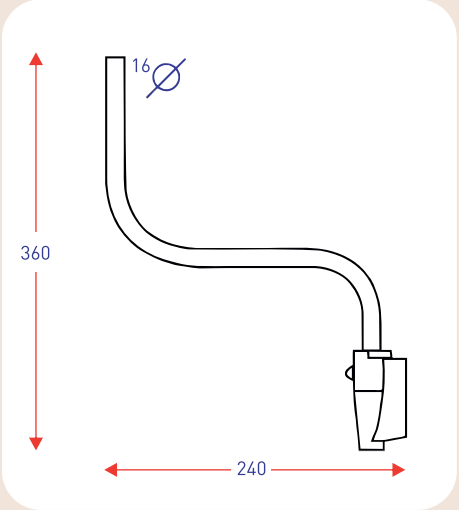

S1187

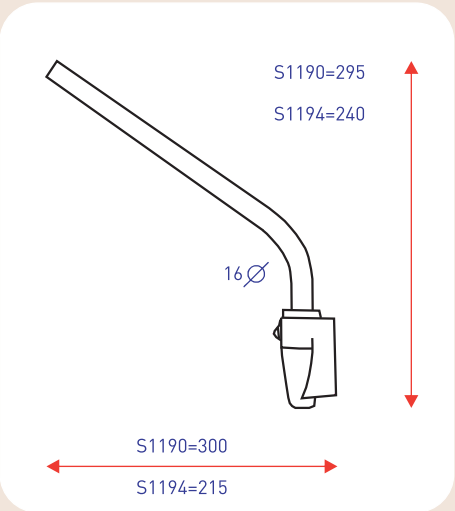

S1190 & S1194

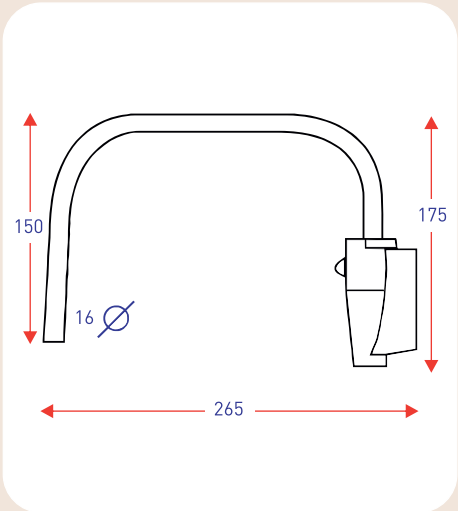

S1191

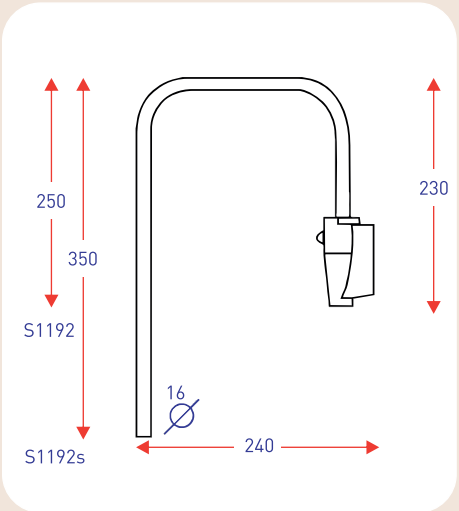

S1192 & S1192s

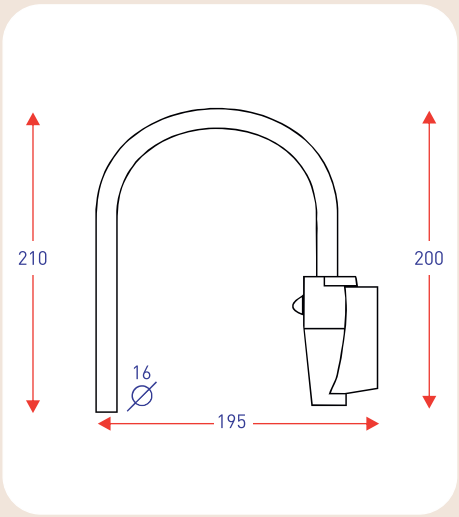

S1193

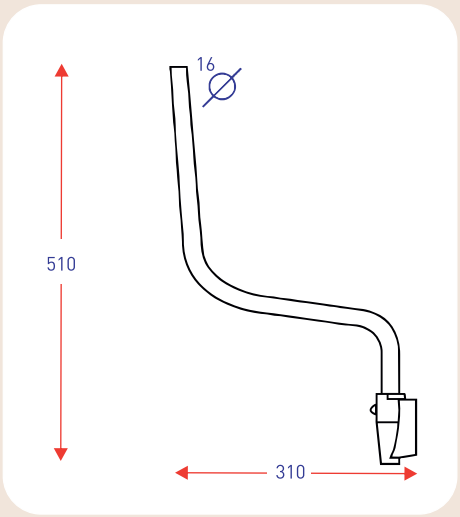

S1195

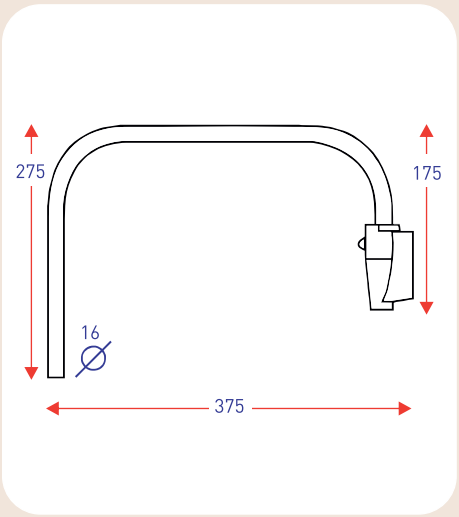

S1196

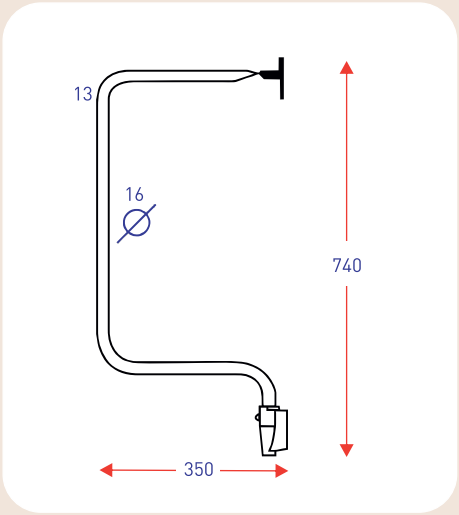

S1197

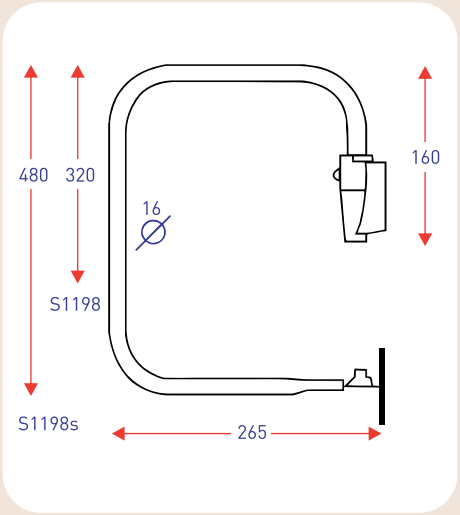

S1198 & S1198s

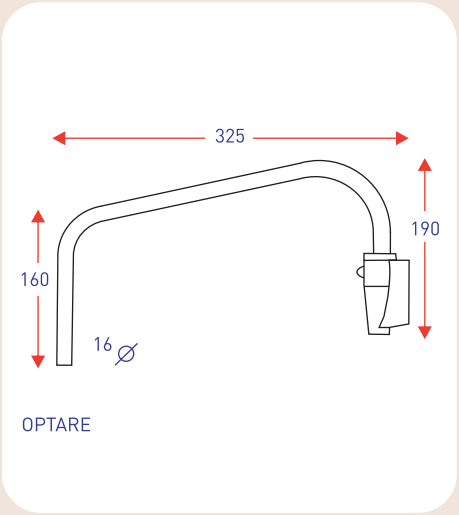

S1200

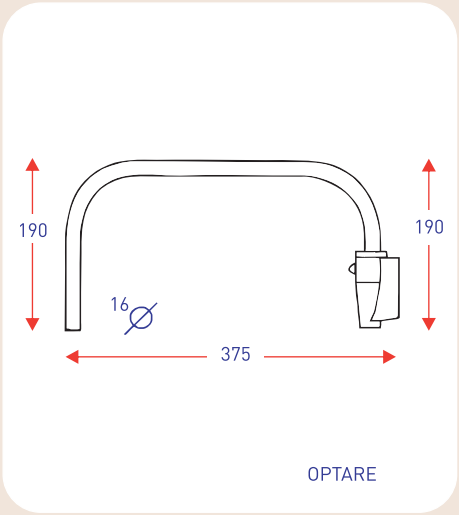

S1201

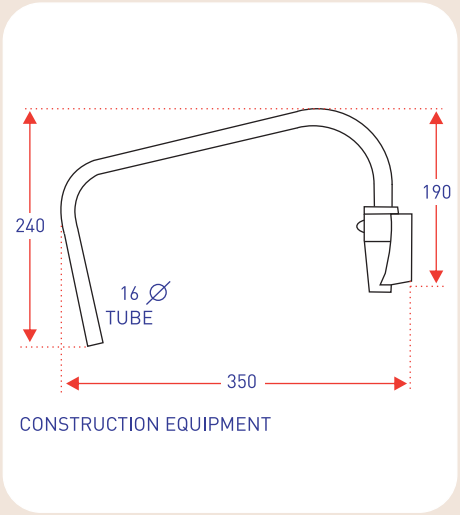

S1222

ASHTREE
VISION & SAFETY

The Ashtree S1300 range of mirror arms use 19mm diameter tube and were originally designed with buses in mind. Such is their strength that we now manufacture them for use on construction equipment and other off highway machinery. The diecast indexing bracket indexes at 22.5 degrees, having 16 different positions in a full 360 degree circle. They mount onto vehicles on a tapered slide and fit onto part numbers Y2670-3 or Y2670-4. These, 3 and 4 hole, wedges have hole configurations which are the same as other popular models on the market. Both of the Ashtree wedges come complete with a fitted grub screw. If needed, this can be tightened to help prevent theft of the arms when in use.

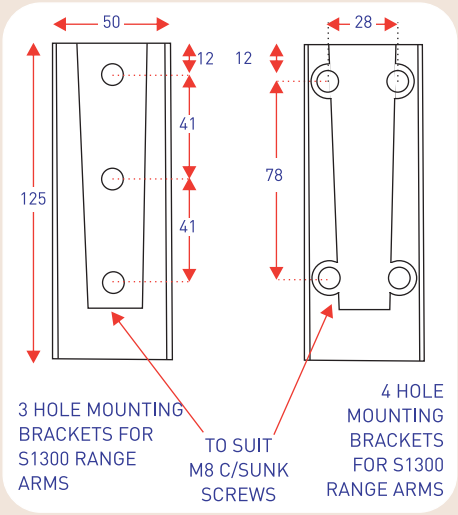

Y2670-3 / Y2670-4

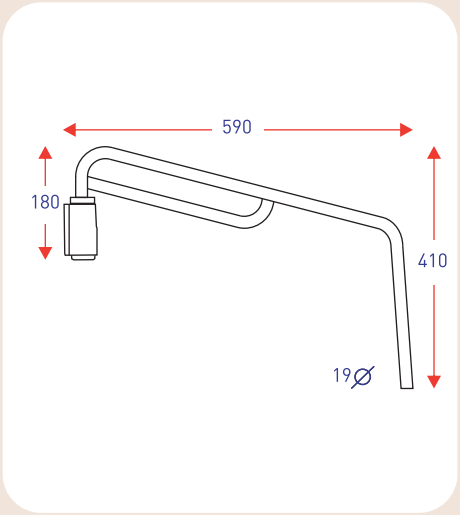

S1350

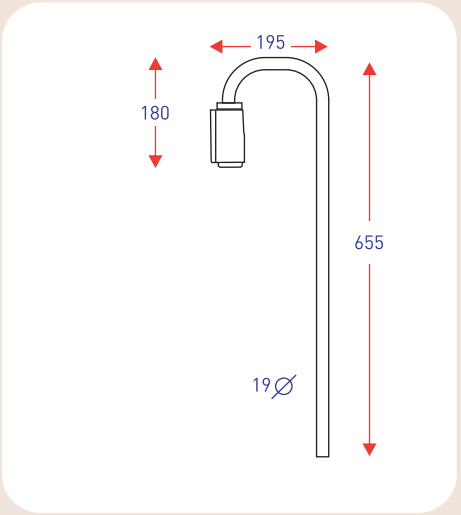

S1352

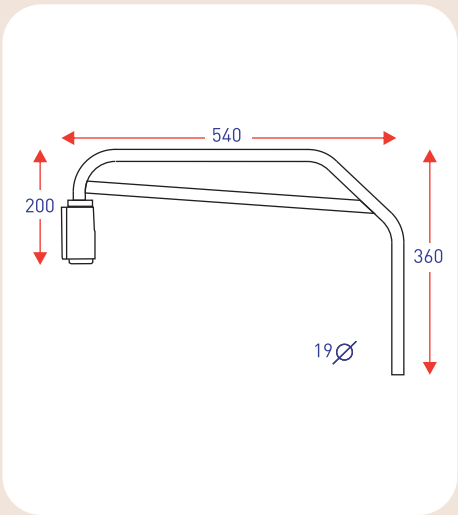

S1360

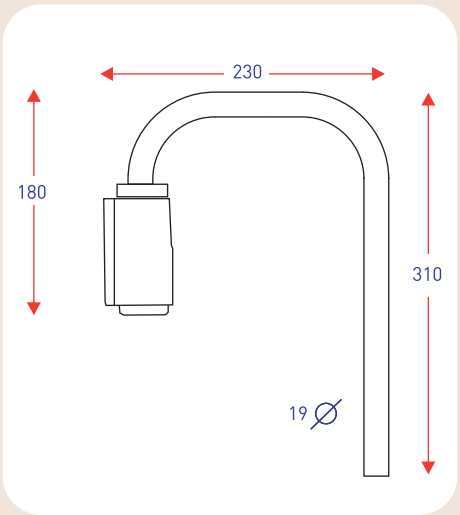

S1361

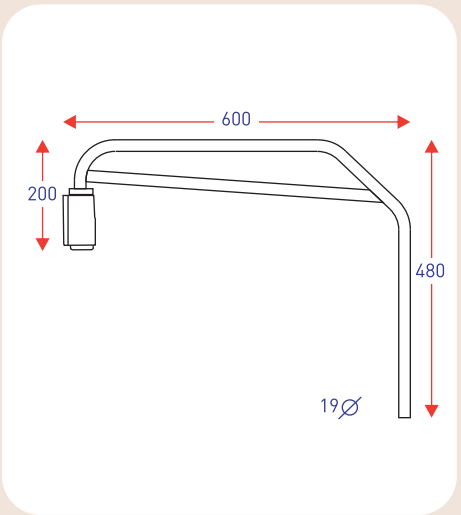

S1370

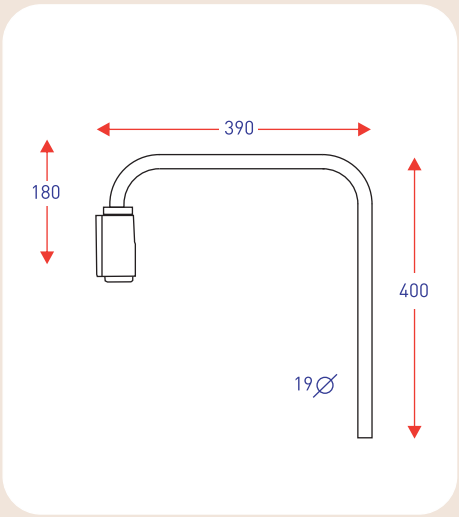

S1372

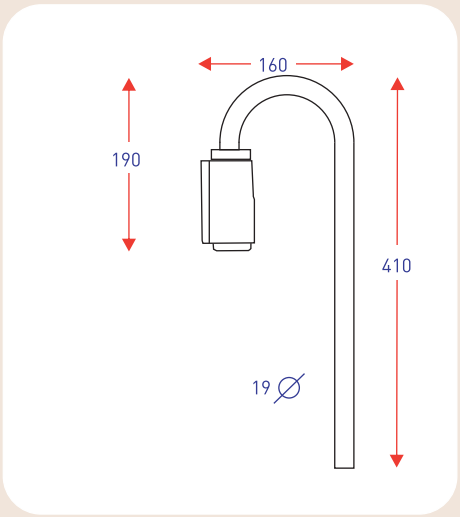

S1374

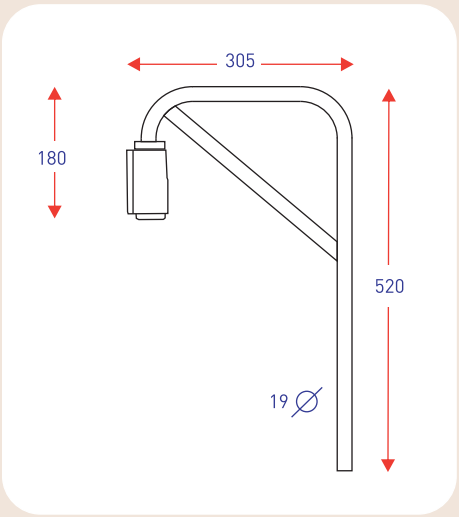

S1375

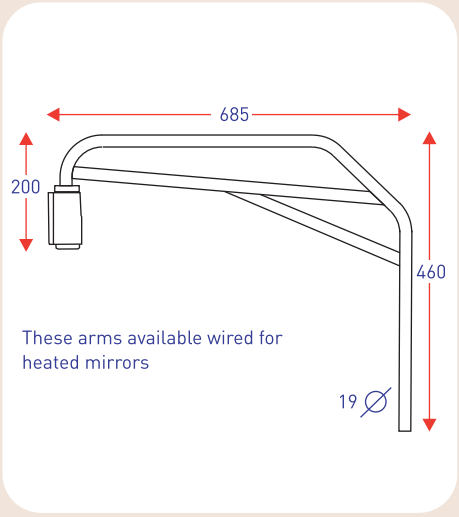

S1376

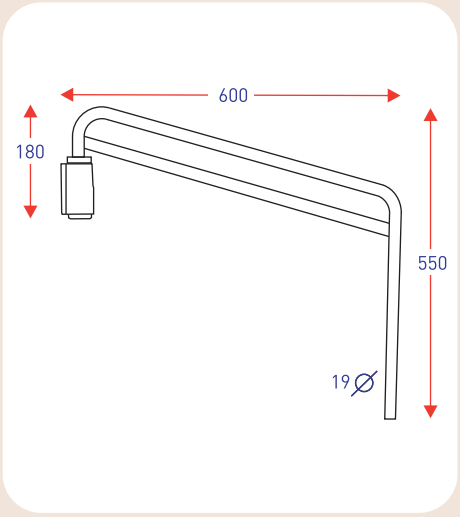

S1377

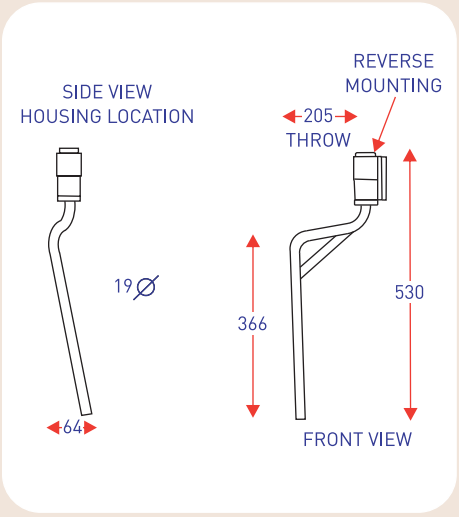

S1378

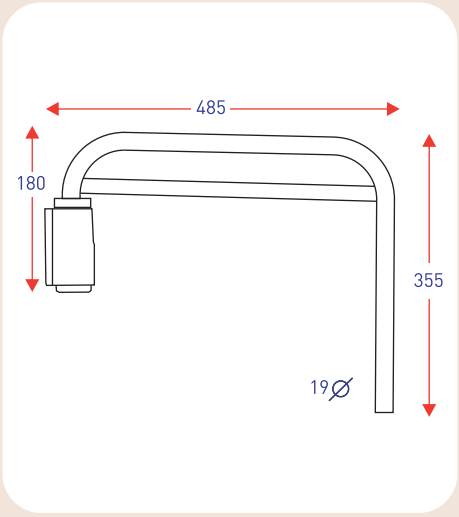

S1381

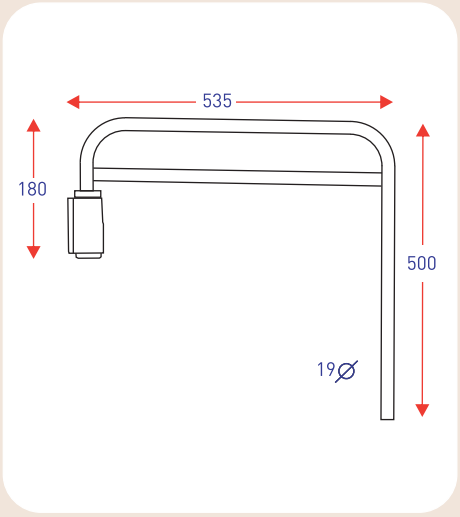

S1382

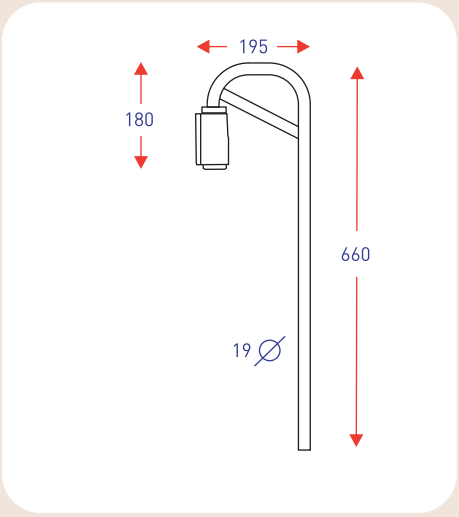

S1384

ASHTREE
VISION & SAFETY

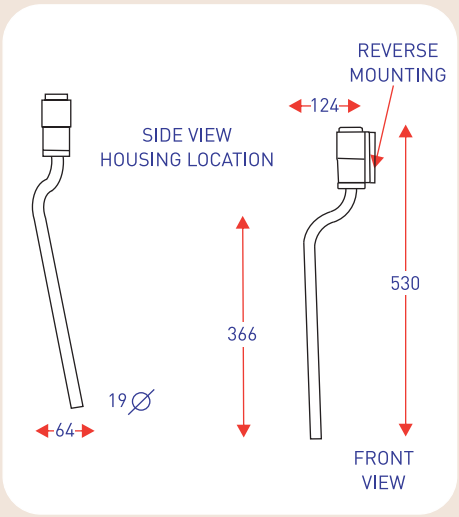

S1385

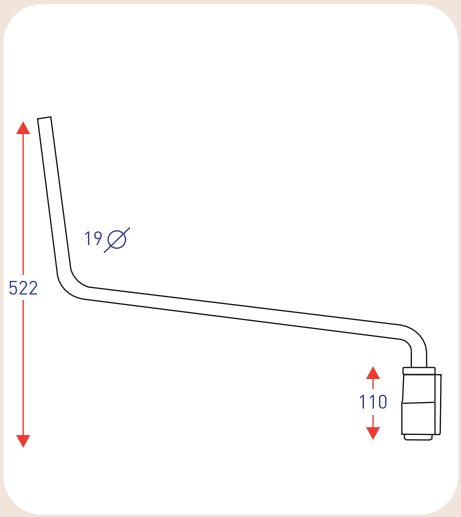

S1397

Ashtree mirrors and arms are used by busbuilders around the world.

ASHTREE
VISION & SAFETY

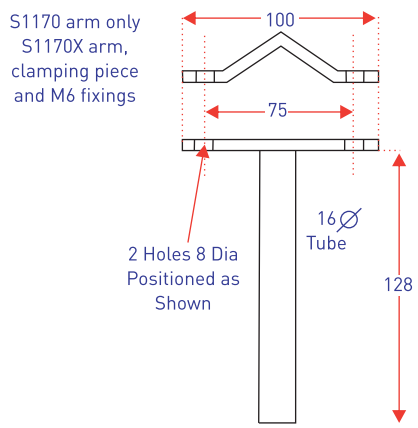

S1170 - S1170X

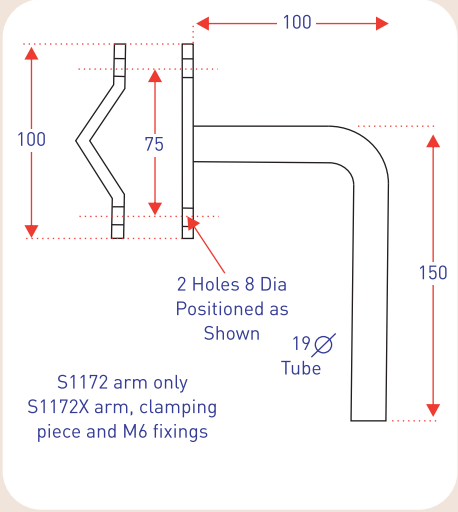

S1172 - S1172X

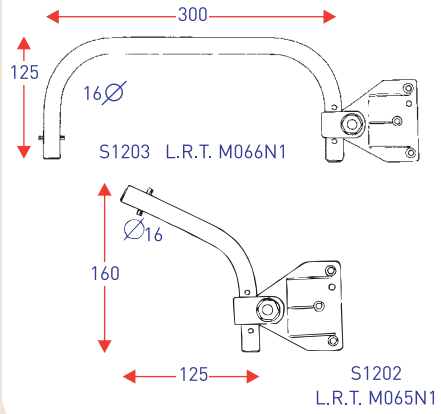

S1202 - S1203

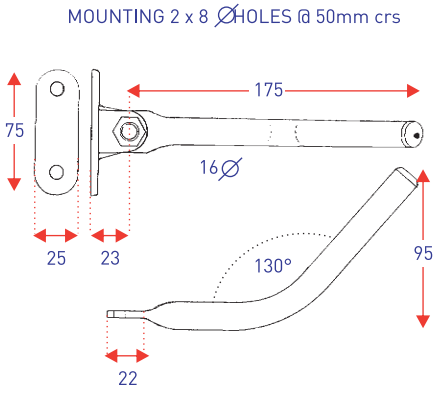

S1216

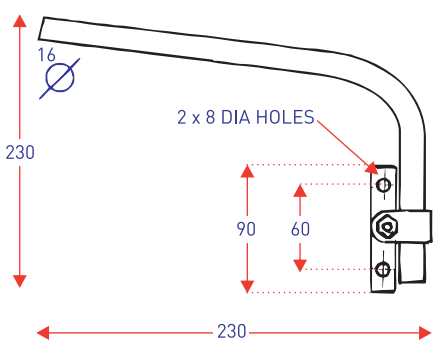

S1217

S1400

S1403

S1406

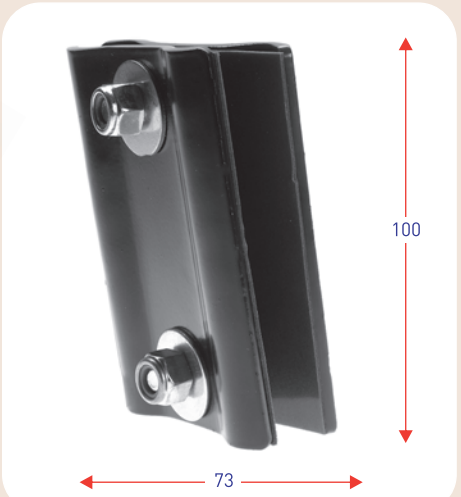

Y2680

ASHTREE
VISION & SAFETY

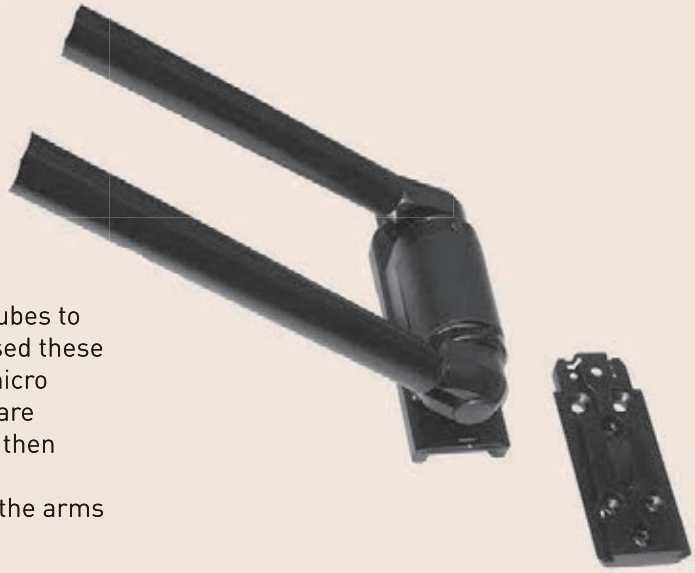

The Ashtree S1500 range of arms use parallel 28mm steel tubes to provide greater stability on the longer mirror arms widely used these days. The arms adjust at 72 degree increments but can be micro adjusted by means of Ashtree's unique system. Two screws are mounted in the main body of the arm, by loosening one, and then tightening the other, the arm can be set to the exact position required. There is also a screw set into the body that allows the arms to be locked into position to help prevent theft.

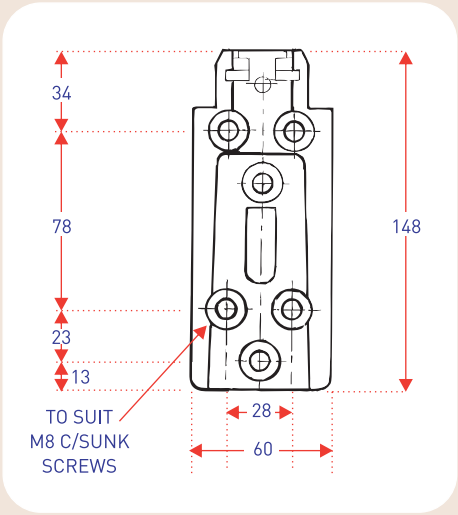

Y2672

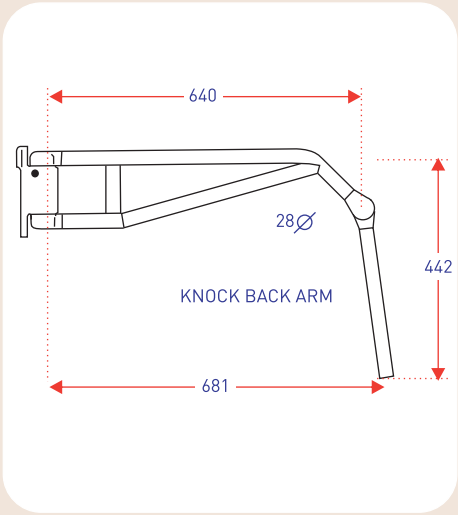

S1500-64/44

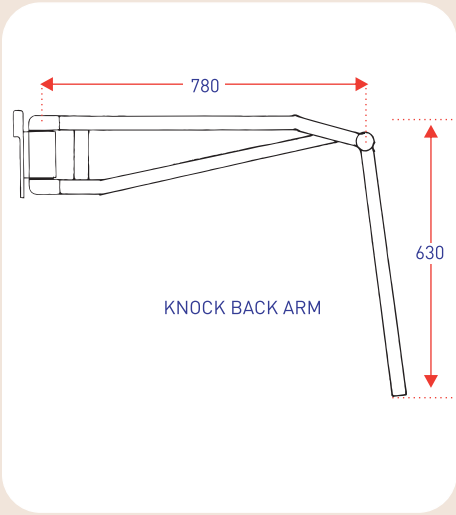

S1500-78/63

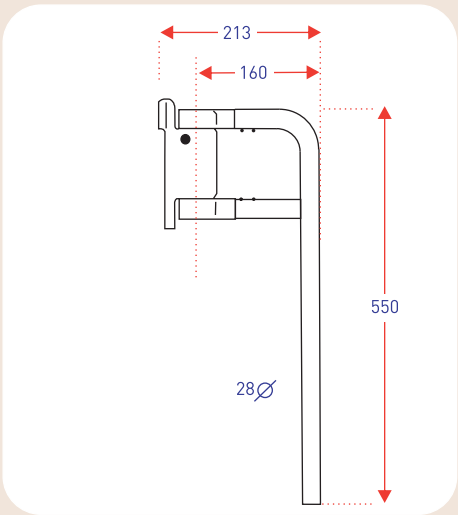

S1550-16/55

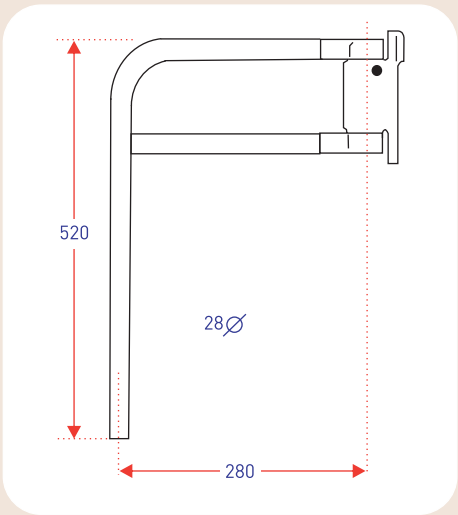

S1550-28/52

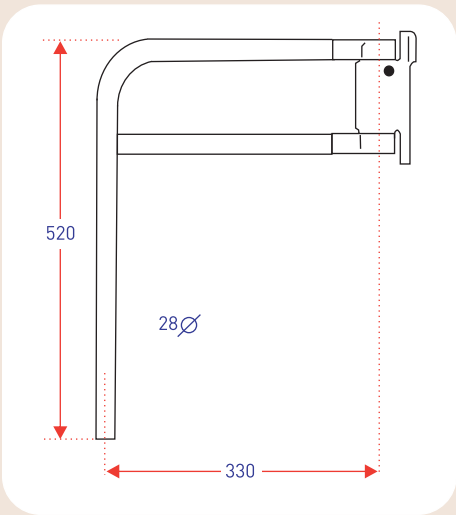

S1550-33/52

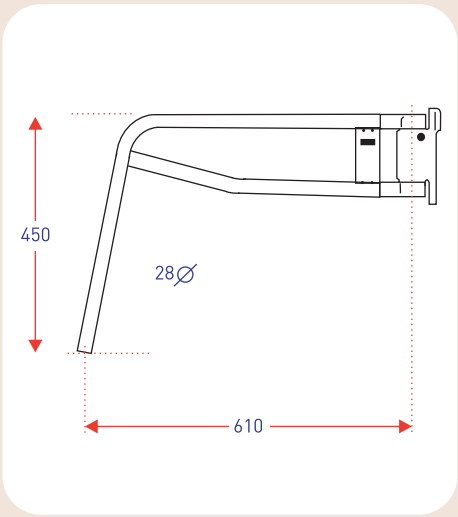

S1550-61/45

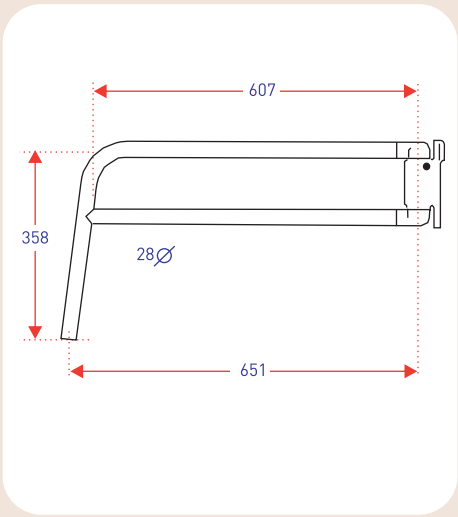

S1550-66/37

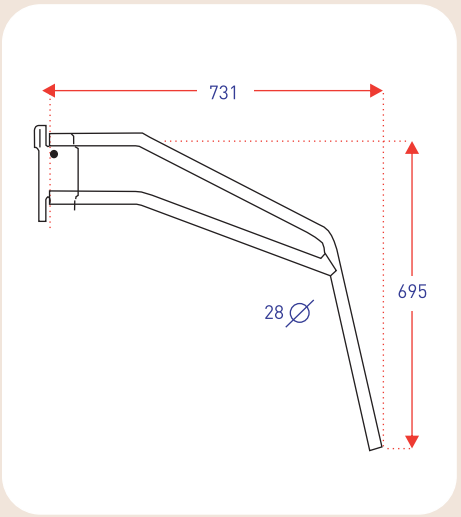

S1550-73/69

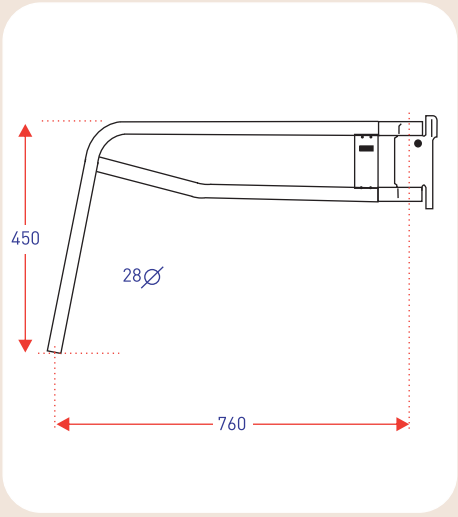

S1550-76/45

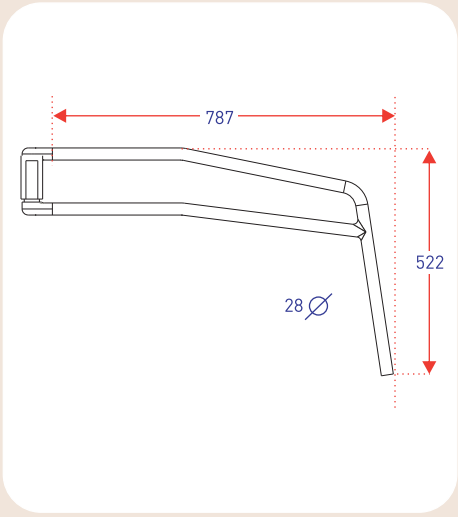

S1550-79/52

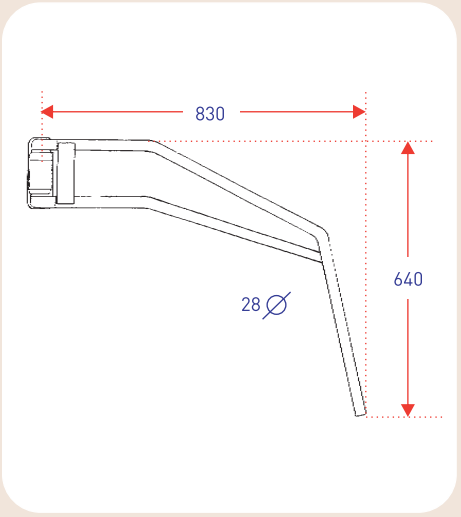

S1550-83/64

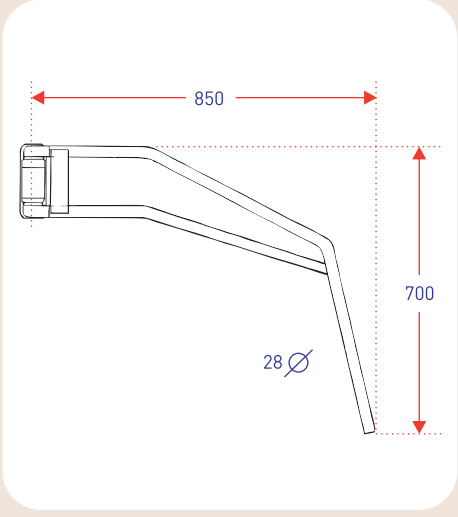

S1550-85/70

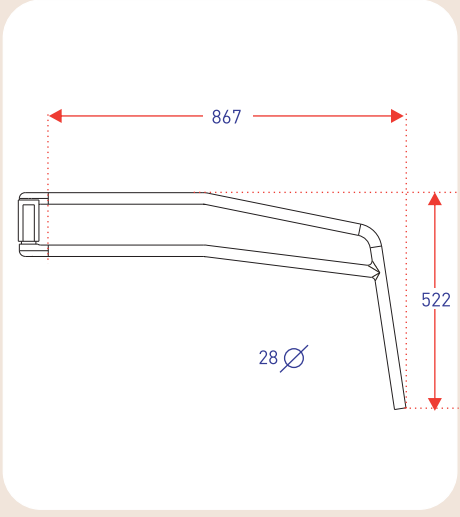

S1550-86/52

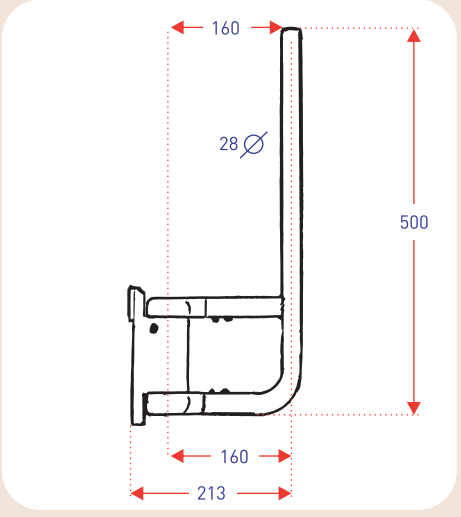

S1551-16/50

S1600 Mirror Arms

The new Ashtree S1600 range of mirror arms are designed for any style of vehicle or machine that needs a more substantial arm than the S900 range of mirror arms. The S1600 series of mirror arms are protected by UK patent GB2474435B

They mount on 2 x M8 threaded holes at 60mm centres. For applications where the arms need to be removed a bolt on wedge, part number Y2242, can be added and then the arm will slide on and off of part numbers Y2670-3 or Y2680-4.

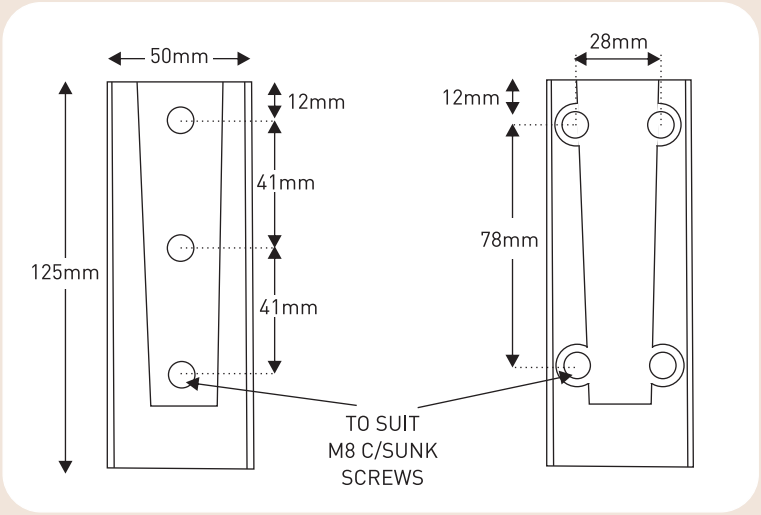

Y2670-3

Y2670-4

Y2242

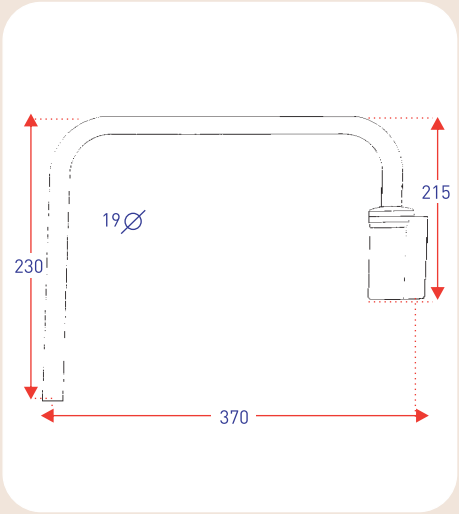

S1601

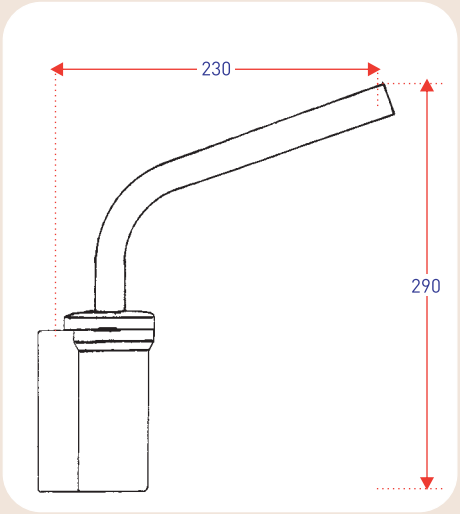

S1602

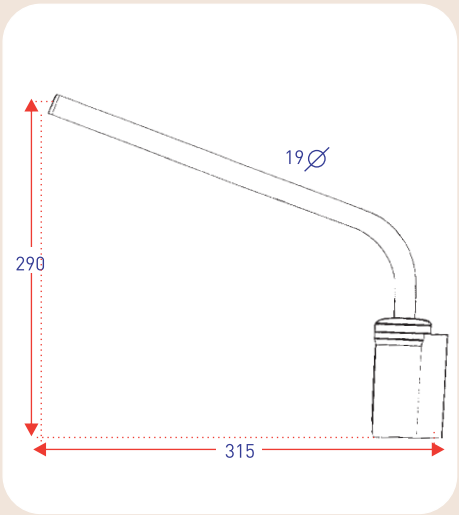

S1603

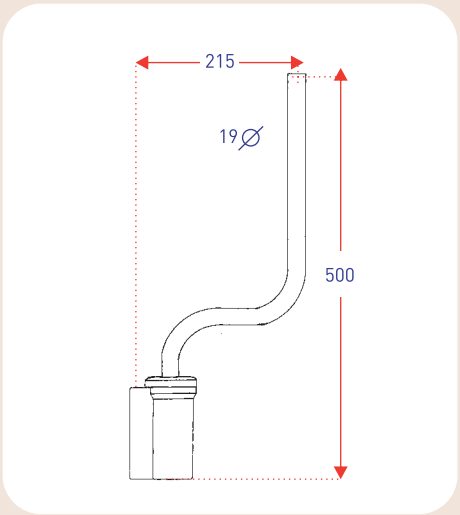

S1604

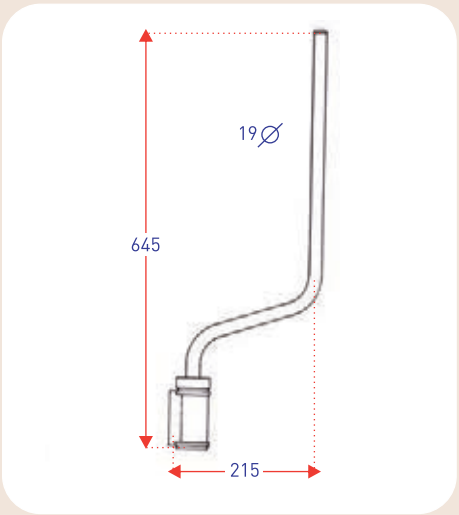

S1605

S1700 Mirror Arms

The new Ashtree S1700 range of mirror arms are dual support mirror arms designed for heavy duty applications.

Where arms are required to be lifted lift off of the vehicle the Y3123 can be fitted to the arm. This will then mount onto the body mounted Y3124 4 hole bracket.

The S1700 series of mirror arms are protected by UK patent GB2474435B

Y3123

Y3124

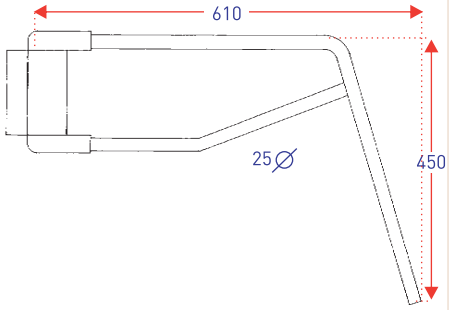

S1750-61/45

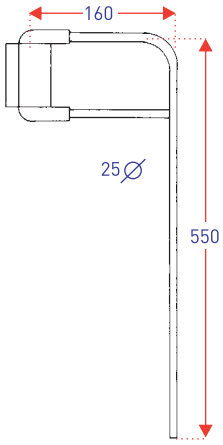

S1750-16/55

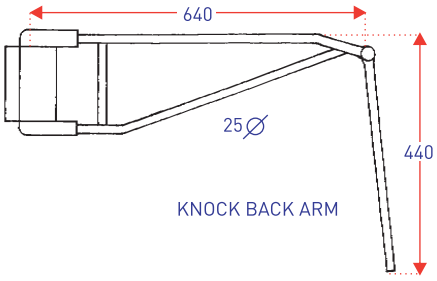

S1700-64/44

AVAILABLE IN SUMMER 2019

S2000 Series Extending Mirror Arms

This new extending mirror arm can be used for either OEM or after market applications. The arm locates onto existing foot prints and has a greater range of extension than many current models.

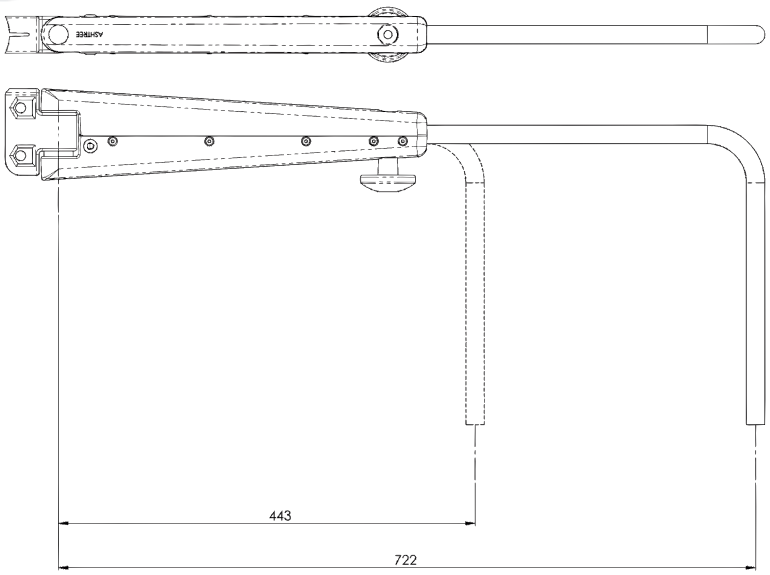

Licence Holders & Accessories

ASHTREE VISION & SAFETY

PLH50

VTG6A heavyweight MOT plate holder

Body: black powder coated steel

Dimensions: 201mm x 184mm

Complete with clear plastic window

PLH52

VTG6A lightweight MOT plate holder

Body: rustproof glass filled nylon

Dimensions: 187mm x 180mm

Complete with clear plastic envelope

PLH60

Vehicle height indicator

Body: rustproof glass filled nylon

Dimensions: 187mm x 180mm

Changeable numerals from 8ft to 19ft 11".

PLH74S

Single pliable licence holder

Back & stem: zinc plated steel

PLH74D

Double pliable licence holder

Back & stem: zinc plated steel

PLH74T

Triple pliable licence holder

Back & stem: zinc plated steel

Profirst Beacons

The Pro-First range of beacons are Reg 10 & Reg 65 approved unless otherwise stated. They have been tried and tested across Europe for several years and have proved to be a great success.

AVS-BEA200

AVS-BEA201

AVS-BEA202

AVS-BEA203

Part numbers:	
AVS-BEA200	200 Series LED Beacon Flexi DIN mount 12/24V - REG 10 & Reg 65 approved
AVS-BEA201	200 Series LED Beacon 1 Bolt mount 12/24V - REG 10 & Reg 65 approved
AVS-BEA202	200 Series LED Beacon 3 bolt Mount 12/24V - REG 10 & Reg 65 approved
AVS-BEA203	200 Series LED Beacon Magnetic mount 12/24V - REG 10 & Reg 65 approved - 70mph rated
AVS-BEA200-GRN	200 Series LED Beacon Flexi DIN mount 12/24V with green lens - REG 10 approved
AVS-BEA202-GRN	200 Series LED Beacon 3 bolt Mount 12/24V with green lens - REG 10 approved
AVS-BLNS-G	Green replacement lens for 200 series beacon
AVS-BLNS-A	Amber replacement lens for 200 series beacon

Indexing brackets for mounting beacons

S1181-Y3135

AVS-ABM202

The Ashtree **S1181-Y3135** is an indexing arm with a beacon mounting plate with European PCD. The **AVS-ABM202** comes complete with the Ashtree **AVS-BEA202.**

Seat belt kits with green beacons and DIN connectors

AVS-SBLT100 1150mm long orange 2 point lap belt with electrical connection (fixed)

AVS-SBLT105 1150mm long orange 2 point lap belt with electrical connection (flexible)

The Mighty Atom

The mini light with mighty performance

The TMA series is compact in size and offers a unique solution for restricted access mounting or where product vulnerability might be an issue. Whilst TMA may be small it delivers on lighting performance meeting the stringent ECE Reg 65 lighting regulation. This is achieved by using 18 x 1 watt LED emitters producing an outstanding warning light output.

Part numbers:
AVS-TMA 200 - Magnetic
AVS-TMA 100 - DIN
AVS-TMA 300 - 3 bolt fixing

Specification:

- ECE Reg 65 approved
- Max Current; 1.7amp @12v, 0.85amp @24v
- IP 67 rated
- Reg 10 approved
- 18 LED 1Watt emitter
- Voltage 9-30v
- 5 x Amber flash patterns including rotate, steady burn, double, quad & quint flash

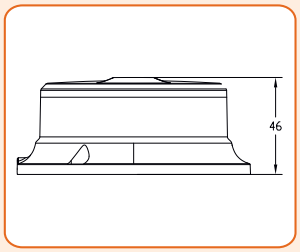

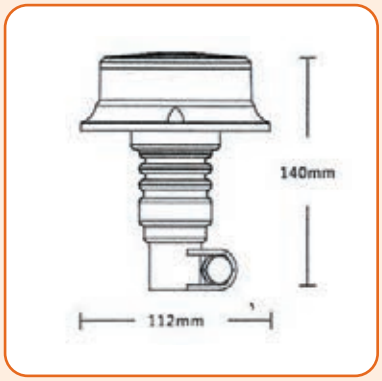

Ashtree DIN Connectors for use with Flexi Din Beacons

AVS-DIN102

AVS-DIN103

AVS-DIN104

AVS-DIN105

AVS-TPD100

Twin pin DIN connector for mounting 2 beacons. Ideal for when and amber and green beacon are required for site safety.

AVS-DIN106

AVS-DIN107

AVS-DIN108

Adjustable DIN connector

AVS Reverse Alarm
programme with multiple options

The AVS reverse alarm programme features an industry standard mounting footprint and incorporates the latest warning technology, including traditional Beep Beep , Multi Frequency environmental tones & Programmed speech instruction.

The AVS Alarm programme conforms to the latest Reg 10 approvals and is IP 67 rated, meeting the toughest of demands in the field.

Specification:
- Multi voltage solutions
- Standard 300 mm flying lead
- Options available stud fixing or terminations including Deutsch connectors.
- Speech instructions can be tailor made to customer requirements (small surcharge applies)

Part numbers :
AVS ALARM100 - 12-100 Volt Reverse Alarm 97dBa
AVS ALARM200 - 12-24 Volt Reverse Alarm 97dBa Reverse twice
AVS ALARM300 - 12-24 Volt Multi-frequency Reverse Alarm 88dBa
AVS ALARM400 - 12-24 Volt Multi-frequency Reverse Alarm 88dBa Reverse twice
AVS ALARM500 - 12-24 Volt Multi-frequency Reverse Alarm 92dBa
AVS ALARM600 - 12-24 Volt Talking alarm "Warning this vehicle is reversing"

Economy Range of Work Lamps

AVS-WLRE616

AVS-WLRE616
L 160 x H 48 x D 61.5mm
- 6LED *3w
- Cree LED
- 1620LM

AVS-WLSQ580

AVS-WLSQ580
L 85 x H 80 x D 40mm
- 5LED *3w
- Epistar LED
- 800LM

AVS-WLRE690

AVS-WLRE690
L 110 x H 62 x D 53mm
- 6LED *3w
- Epistar LED
- 900LM

AVS-WLSQ914

AVS-WLSQ914
L 110 x H 125 x D 55mm
- 9LED *3w
- Epistar LED
- 1400LM

AVS-WLCI914

AVS-WLCI914
L 110 x H 128 x D 55mm
- 9LED *3w
- Epistar LED
- 1400LM

Standard specification: 10 - 30 volts • Stainless steel bracket • Die Cast aluminium housing • R10 CE approved • 6500K colour temperature • 1 year warranty

AVS-WLCU990

AVS-WLCU990
L 50 x H 50
- 9LED 15w
- 900LM

AVS-WLMB1

AVS-WLMB1
- Work light complete with clamp
- Clamp fits 16-28mm diameter pole

AVS-WLMB2

AVS-WLMB2
- Work light complete with clamp
- Clamp fits 16-28mm diameter pole

AVS-SCENE1

AVS-SCENE1
- 4xLED *3w
- IP67 rated
- 10-30 volt
- R10 approved
- 900LM

AVS-WLSQ4 Blue

AVS-WLSQ4 Blue
- Blue LED Work Light
- 4LED
- 10-30 volt
- 1200LM

Compact LED Mini Light Bars

ASHTREE VISION & SAFETY

IMPROVED DESIGN

R10 & R65 Approved

R10 Approved

Part numbers:

AVS MLB500 - Mini lightbar, single bolt fitting, R10 & R65 approved with 26 flash patterns

AVS MLB600 - Mini lightbar, magnetic fitting, R10 & R65 approved with 26 flash patterns

Specification:

- 12-24v
- 26 Flash patterns
- Polycarbonate Lens
- REG 10 REG 65 approved
- IP65
- 30 x 1watt LED's
- Extruded aluminium base
- Two fixings : Magnetic with plug & switch to change flash patterns
- 280mm L x 165mm W x 57mm H

Part numbers:

AVS MLB100 - Mini lightbar, single bolt fitting, R10 approved with 8 flash patterns

AVS MLB200 - Mini lightbar, magnetic fitting, R10 approved with 8 flash patterns

Specification:

- 12-24v
- 8 Flash patterns
- Polycarbonate Lens
- REG 10 approved
- IP65
- 24 x 1watt LED's
- Extruded aluminium base
- Two fixings : Magnetic with plug & switch to change flash patterns
- 310mm L x 159mm W x 75mm H

Smart LED Ballast Socket

eliminates false alarms

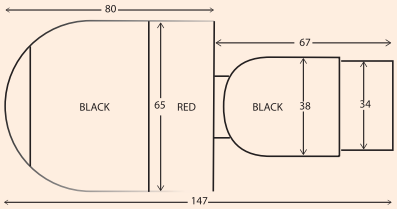

We are pleased to launch our LED ballast socket and plug.

This clever towing socket mimics the load of traditional tail lights to eliminate false bulb failure warnings when using trailers equipped with LED lights.

The unit is of heavy duty construction with the electronics encapsulated in epoxy to protect against water and vibration.

Part number : AVS BAL 1

- Voltage 12 volts
- Eliminates bulb failure warning for trailers with LED lighting
- Mimics the load of normal lights
- Heavy duty construction
- Electronics epoxy encapsulated protecting against water & vibration
- Reg 10 approved

Quality Camera Systems from Ashtree

ASHTREE VISION & SAFETY

AVS-BALCAM

AVS-SIDCAM

AVS STD CAM

AVS-CCTVEXT10M & 20M

AVS-CCTV300

AVS Part No.	
AVS-CCTV300	Reversing camera set, 7" monitor (13 pin power), CMOS camera with microphone. 15m, 4 pin cable 3 way video input, 1 way audio, 3 way trigger wire, D type bracket
AVS-MIRRCAM	Mirror arm camera, fits 23-28mm diameter arms. IP68K. Angle 120/90 degrees
AVS-STDCAM	Standard camera, CMOS with microphone, Angle 120 degrees. IP68K
AVS-SIDCAM	Single view camera. IP68K. Angle 120 degrees
AVS-CCTVEXT10M	Extended 4 pin cable 10m
AVS-CCTVEXT20M	Extended 4 pin cable 20m

Heavy Duty E Approved Head Lamp with Indicator

Part numbers:

AVS-ACC108 - Head lamp with indicators - halogen 24v rear centre mount RH

AVS-ACC109 - Head lamp with indicators - halogen 24v rear centre mount LH

AVS-ACC110 - Head lamp with indicators - halogen 12v rear centre mount RH

AVS-ACC111 - Head lamp with indicators - halogen 12v rear centre mount LH

Y3134

400mm long, 7 core cable with 6 way male Deutsch connector

DT 6 way connection

Rear Swivel

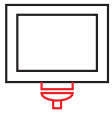

Pedestal swivel

Specification:

- High / low beam meets ECE R112
- Additional functions: Turn signal, pilot light
- IP66 rated
- Upright version 12 volt only
- Rear bolt mounting 24 volt only
- IP 66 - IP 69K
- Operating temp: -40°C to +85°C
- Salt spray: ISO 9227
- Lens: hardened glass
- Housing: Black fibre reinforced plastic

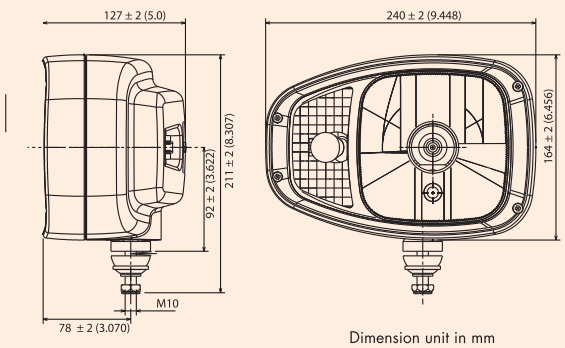

Dimension unit in mm

ASHTREE
VISION & SAFETY

are proud to supply:

LIEBHERR

bosal
Bosal-Sekura Industries

VDL
BUS & COACH

WACKER NEUSON

RENAULT TRUCKS Defense

Multihog®

JCB

MULAG

MOL

MECALAC

Linde Material Handling Linde

HYDREMA

YANMAR

40 JAHRE ATLAS WEYHAUSEN
RADLADER AUS LEIDENSCHAFT SEIT 1921

PLAXTON

V.MARIOTTI
SINCE 1920
COMPACT FORKLIFT SOLUTIONS

SENNEBOGEN

DIETEG

ALEXANDER DENNIS

EGHOLM

HYSTER

Optimas
Optimas®

FLK

KOMATSU

SCARAB
FAYAT GROUP

GREEN MACHINES™
from Tennant Company

JLG

Optare

Yale

CABINES SARRAZIN
LA QUALITÉ AU SERVICE DE LA SÉCURITÉ

Ashtree would like to thank the customers above for permission to use their logos.

Ashtree Works, Brownroyd Street, Bradford, BD8 9AF, UK.
Tel: (0)1274 546732 • Fax: (0)1274 548525
Email: sales@avsuk.co
www.avsuk.co

CERTIFICATION UTAC ISO 9001 UTAC CERAM

CERTIFICATION UTAC ISO 14001 UTAC CERAM

© Ashtree Visions & Safety 2019